PC1300BPH Series



10.4” ~ 21.5” Fanless Panel PC with High Brightness Display and Intel® Core™ i3-7100U/i5-7300U/i7-7600U Processor

- High-Brightness Capacitive Touch Screen
- Multiple Memory and Storage Options Available
- Windows® 10, Windows® 11, Linux® OS Options
- Optional Wi-Fi Upgrade
- Panel or VESA mount
- Integrate with AVEVA EDGE® SCADA Solution

System	**CPU**	Intel® 7th Generation Dual Core™ :	i3-7100U @ 2.4GHz i5-7300U @ 2.6GHz i7-7600U @ 2.8GHz		
	System Memory Options	2 x DDR4 260-pin SO-DIMM Non-ECC RAM (4, 8, 16, 32 GB)			
I/O Ports	**USB**	2 x USB 2.0 type A 4 x USB 3.0 type A			
	Serial	1 x RS-232/422/485 DE-9P, COM1 (default RS-232) 3 x RS-232 DE-9P, COM2/COM3/COM4			
	Audio	1 x 3.5 mm Line-out 1 x 3.5 mm Mic-in			
	LAN	2 x GbE RJ-45			
	Power	DC power input jack, thumbscrew secured.			
	Power Switch	1 x Momentary Pushbutton with Integrated LED			
	External Display Connector	1 x DisplayPort 1.2 1 x HDMI® 1.4a			
Storage	**Solid State Drive Options**	1 x 2.5” SATA III, MLC (64, 128, 256, 512 GB, 1TB SSD)			
	SD Card Slot	N/A			
Expansion	**Expansion Slot**	Optional Wi-Fi kit (Wi-Fi card and antenna)			
Touch Screen	**Type**	Projected Capacitive Touch			
	Interface	USB			
Display	**Display Type**	**10.4” TFT XGA LCD**	**12.1” TFT XGA LCD**	**15” TFT XGA LCD**	**15.6” Widescreen TFT FHD LCD**
	Max. Resolution	1024 X 768	1024 X 768	1024 x 768	1920 x 1080
	Max. Color	16.2 M	16.2 M	16.2 M	16.2 M
	Luminance (cd/m²)	**1000**	**1000**	**1000**	**1000**
	View Angle (H°/V°)	170/170	170/170	170/160	170/170
	Contrast Ratio	1000:1	700:1	2000:1	500:1
	Backlight Lifetime (Hours)	30,000+	30,000+	30,000+	50,000+
Electrical	**Input Voltage**	9~24 VDC	9~24 VDC	9~24 VDC	9~24 VDC
	Input Current	1.83~4.9 A	1.85~4.94 A	2.08~5.56 A	2.40~6.39 A
	Input Power	44 W	44.5 W	50 W	57.5 W
Mechanical	**Dimension (W x H x D)**	11.57 x 8.90 x 3.62” [294 x 226 x 92 mm]	12.48 x 9.65 x 3.62” [317 x 245 x 92 mm]	13.97 x 11.40 x 3.62” [354.9 x 289.5 x 92 mm]	15.75 x 9.84 x 3.36” [400 x 250 x 85.4 mm]
	Net Weight	8.38 lbs [3.8 kg]	9.04 lbs [4.1 kg]	11.46 lbs [5.2 kg]	11.46 lbs [5.2 kg]
	Panel Cutout Dimensions (W x H)	10.63 x 7.95” [270 x 202 mm]	11.54 x 8.70” [293 x 221 mm]	13.03 x 10.47” [331 x 266 mm]	14.57 x 8.90” [370 x 226 mm]
	Mounting	Panel mounting, VESA 100 x 100			
	Construction	Black Steel Chassis, Aluminum Heatsink			
	Rating	IP65 compliant front panel, NEMA 4 when panel mounted			
Environmental	**Operating Temperature**	32~140°F [0~60°C]			
	Storage Temperature	-22~175°F [-30~80°C]			
	Storage Humidity	10 to 90% @ 40°C, non-condensing			
	Shock Resistance	10G acceleration peak to peak, 11ms duration			
	Vibration Resistance	5~17 Hz, 0.1” double amplitude peak to peak, 1.5G acceleration peak to peak			
	Certifications	CE / FCC Class B / RoHS			
Operating System	**Microsoft Windows® Options**	Microsoft Windows® 10 IoT Enterprise Embedded LTSC 64-bit (EPKEA) Microsoft Windows® 10 IoT Enterprise LTSC 64-bit (PKEA) Microsoft Windows® 11 IoT Enterprise Embedded LTSC 64-bit (EPKEA) Microsoft Windows® 11 IoT Enterprise LTSC 64-bit (PKEA) Microsoft Windows® 11 Professional			
	Linux® Options	Linux® Ubuntu Desktop			
Notes	Specifications subject to change without notice.				

PC1300BPH Series



10.4” ~ 21.5” Fanless Panel PC with High Brightness Display and Intel® Core™ i3-7100U/i5-7300U/i7-7600U Processor

- High-Brightness Capacitive Touch Screen
- Multiple Memory and Storage Options Available
- Windows® 10, Windows® 11, Linux® OS Options
- Optional Wi-Fi Upgrade
- Panel or VESA mount
- Integrate with AVEVA EDGE® SCADA Solution

System	**CPU**	Intel® 7th Generation Dual Core™ :	i3-7100U @ 2.4GHz i5-7300U @ 2.6GHz i7-7600U @ 2.8GHz	
	System Memory Options	2 x DDR4 260-pin SO-DIMM Non-ECC RAM (4, 8, 16, 32 GB)		
I/O Ports	**USB**	2 x USB 2.0 type A 4 x USB 3.0 type A		
	Serial	1 x RS-232/422/485 DE-9P, COM1 (default RS-232) 3 x RS-232 DE-9P, COM2/COM3/COM4		
	Audio	1 x 3.5 mm Line-out 1 x 3.5 mm Mic-in		
	LAN	2 x GbE RJ-45		
	Power	DC power input jack, thumbscrew secured.		
	Power Switch	1 x Momentary Pushbutton with Integrated LED		
	External Display Connector	1 x DisplayPort 1.2 1 x HDMI® 1.4a		
Storage	**Solid State Drive Options**	1 x 2.5” SATA III, MLC (64, 128, 256, 512 GB, 1TB SSD)		
	SD Card Slot	N/A		
Expansion	**Expansion Slot**	Optional Wi-Fi kit (Wi-Fi card and antenna)		
Touch Screen	**Type**	Projected Capacitive Touch		
	Interface	USB		
Display	**Display Type**	**17” TFT SXGA LCD**	**19” TFT SXGA LCD**	**21.5” Widescreen TFT FHD LCD**
	Max. Resolution	1280 x 1024	1280 x 1024	1920 x 1080
	Max. Color	16.2 M	16.2 M	16.2 M
	Luminance (cd/m²)	**1000**	**1000**	**1000**
	View Angle (H°/V°)	160/160	160/160	170/160
	Contrast Ratio	1000:1	1000:1	3000:1
	Backlight Lifetime (Hours)	30,000+	30,000+	30,000+
Electrical	**Input Voltage**	9~24 VDC	9~24 VDC	9~24 VDC
	Input Current	2.29~6.11 A	2.50~6.67 A	2.94~7.83 A
	Input Power	55 W	60 W	70.5 W
Mechanical	**Dimension (W x H x D)**	15.23 x 13.09 x 3.62” [386.9 x 332.5 x 92 mm]	17.44 x 14.49 x 3.44” [443 x 368 x 87.4 mm]	20.63 x 13.00 x 3.62” [524 x 330.2 x 92 mm]
	Net Weight	13.67 lbs [6.2 kg]	18.52 lbs [8.4 kg]	18.74 lbs [8.5 kg]
	Panel Cutout Dimensions (W x H)	14.29 x 12.17” [363 x 309 mm]	16.69 x 13.82” [424 x 351 mm]	19.82 x 12.09” [503.5 x 307 mm]
	Mounting	Panel mounting, VESA 100 x 100		
	Construction	Black Steel Chassis, Aluminum Heatsink		
	Rating	IP65 compliant front panel, NEMA 4 when panel mounted		
Environmental	**Operating Temperature**	32~140°F [0~60°C]		
	Storage Temperature	-22~175°F [-30~80°C]		
	Storage Humidity	10 to 90% @ 40°C, non-condensing		
	Shock Resistance	10G acceleration peak to peak, 11ms duration		
	Vibration Resistance	5~17 Hz, 0.1” double amplitude peak to peak, 1.5G acceleration peak to peak		
	Certifications	CE / FCC Class B / RoHS		
Operating System	**Microsoft Windows® Options**	Microsoft Windows® 10 IoT Enterprise Embedded LTSC 64-bit (EPKEA) Microsoft Windows® 10 IoT Enterprise LTSC 64-bit (PKEA) Microsoft Windows® 11 IoT Enterprise Embedded LTSC 64-bit (EPKEA) Microsoft Windows® 11 IoT Enterprise LTSC 64-bit (PKEA) Microsoft Windows® 11 Professional		
	Linux® Options	Linux® Ubuntu Desktop		
Notes	Specifications subject to change without notice.			

PC1310BPH

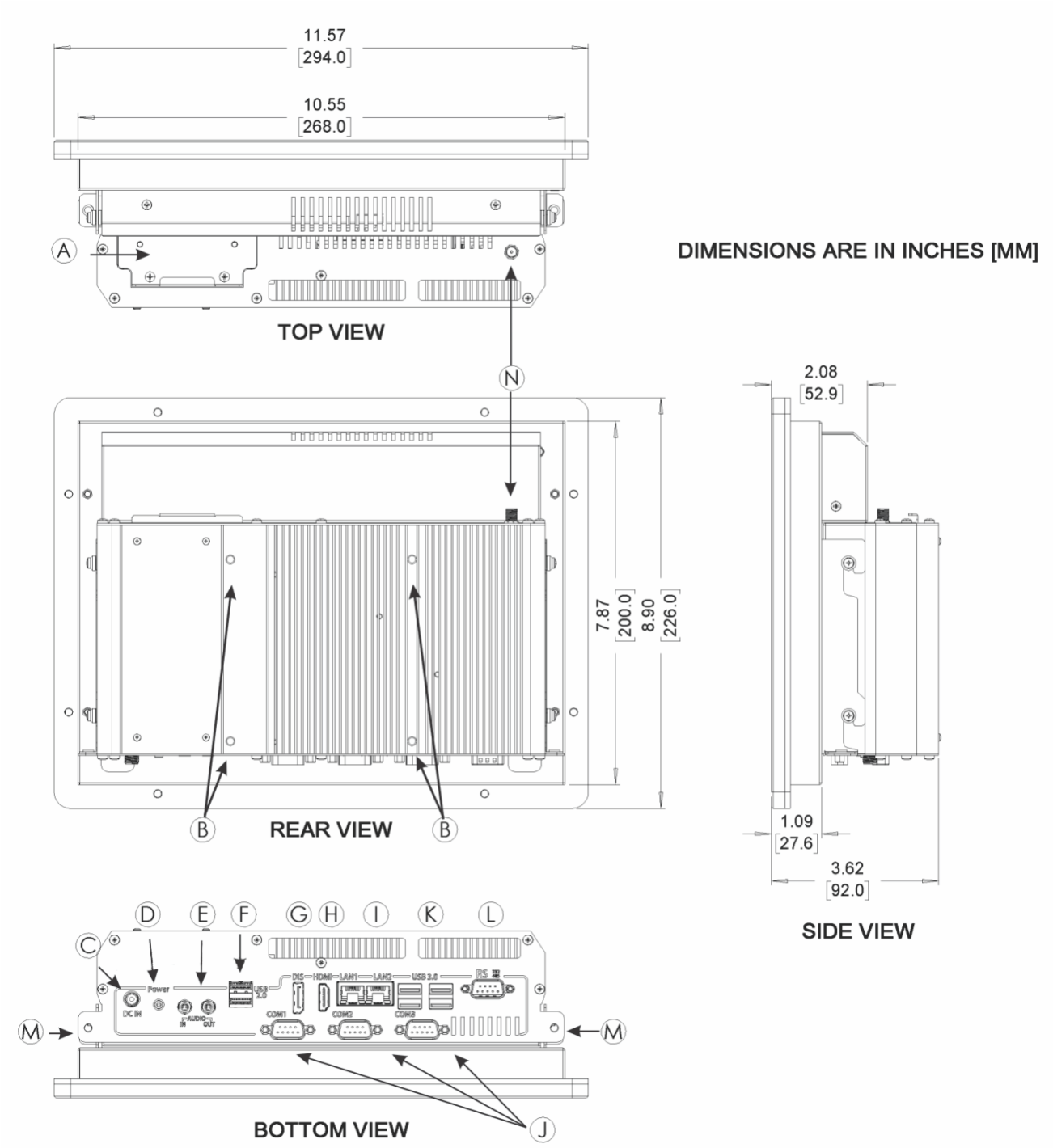

A	Solid State Drive Bay	**H**	HDMI® Output
B	VESA 100 x 100 mounting	**I**	Gigabit Ethernet Ports
C	DC Input Power Connector	**J**	COM Ports DE9P (RS232)
D	Illuminated Power Button	**K**	USB 3.0 Host Ports
E	3.5mm Audio Ports (Mic-In / Line Out)	**L**	COM Port DE9P (RS232/RS422/RS485 Configurable)
F	USB 2.0 Host Ports	**M**	Thumb-Screw Mounting
G	DisplayPort Output	**N**	Wi-Fi Antenna Connector (Nonfunctional unless Wi-Fi Option Purchased)

PC1312BPH

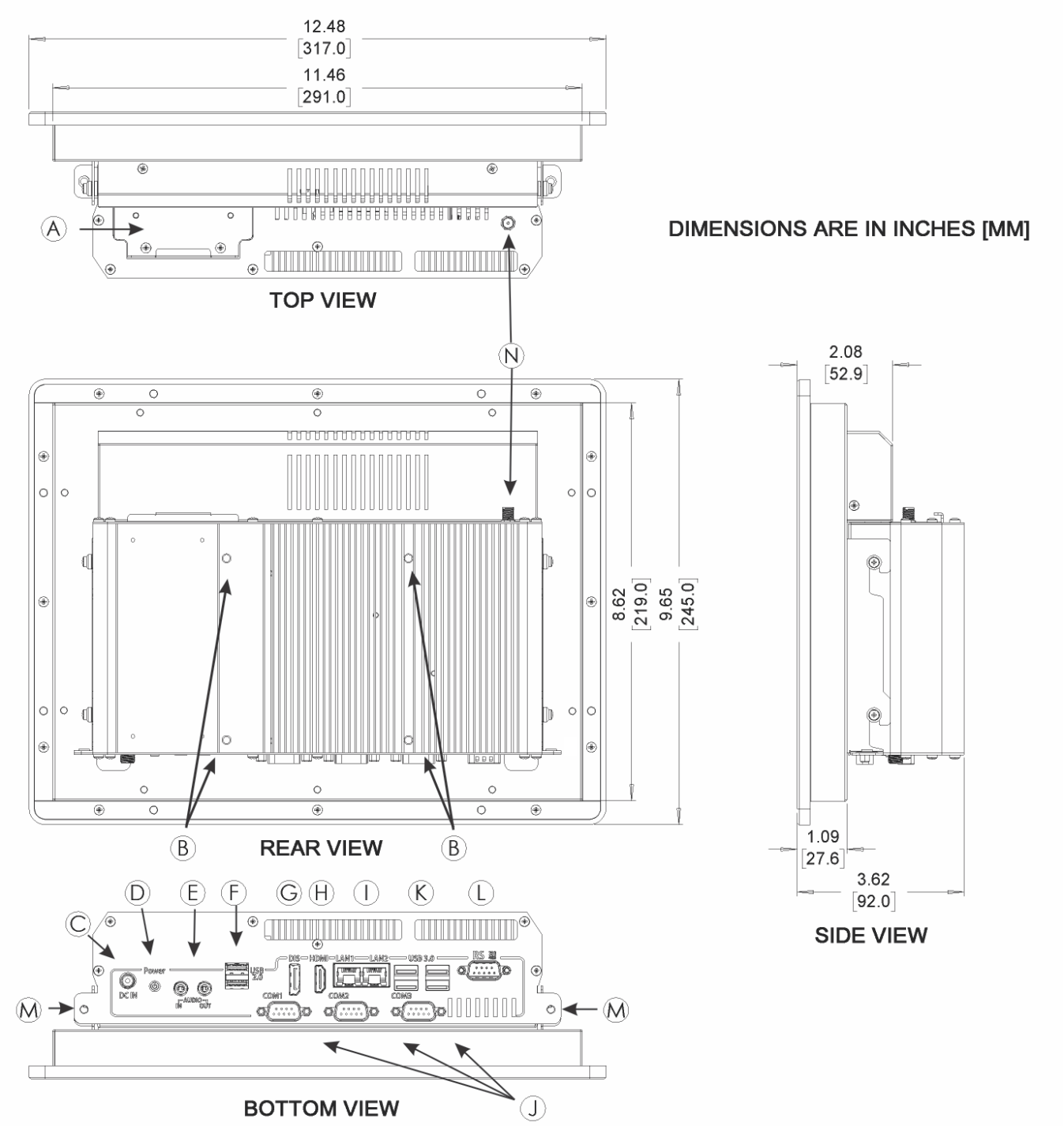

A	Solid State Drive Bay	**H**	HDMI® Output
B	VESA 100 x 100 mounting	**I**	Gigabit Ethernet Ports
C	DC Input Power Connector	**J**	COM Ports DE9P (RS232)
D	Illuminated Power Button	**K**	USB 3.0 Host Ports
E	3.5mm Audio Ports (Mic-In / Line Out)	**L**	COM Port DE9P (RS232/RS422/RS485 Configurable)
F	USB 2.0 Host Ports	**M**	Thumb-Screw Mounting
G	DisplayPort Output	**N**	Wi-Fi Antenna Connector (Nonfunctional unless Wi-Fi Option Purchased)

PC1315BPH

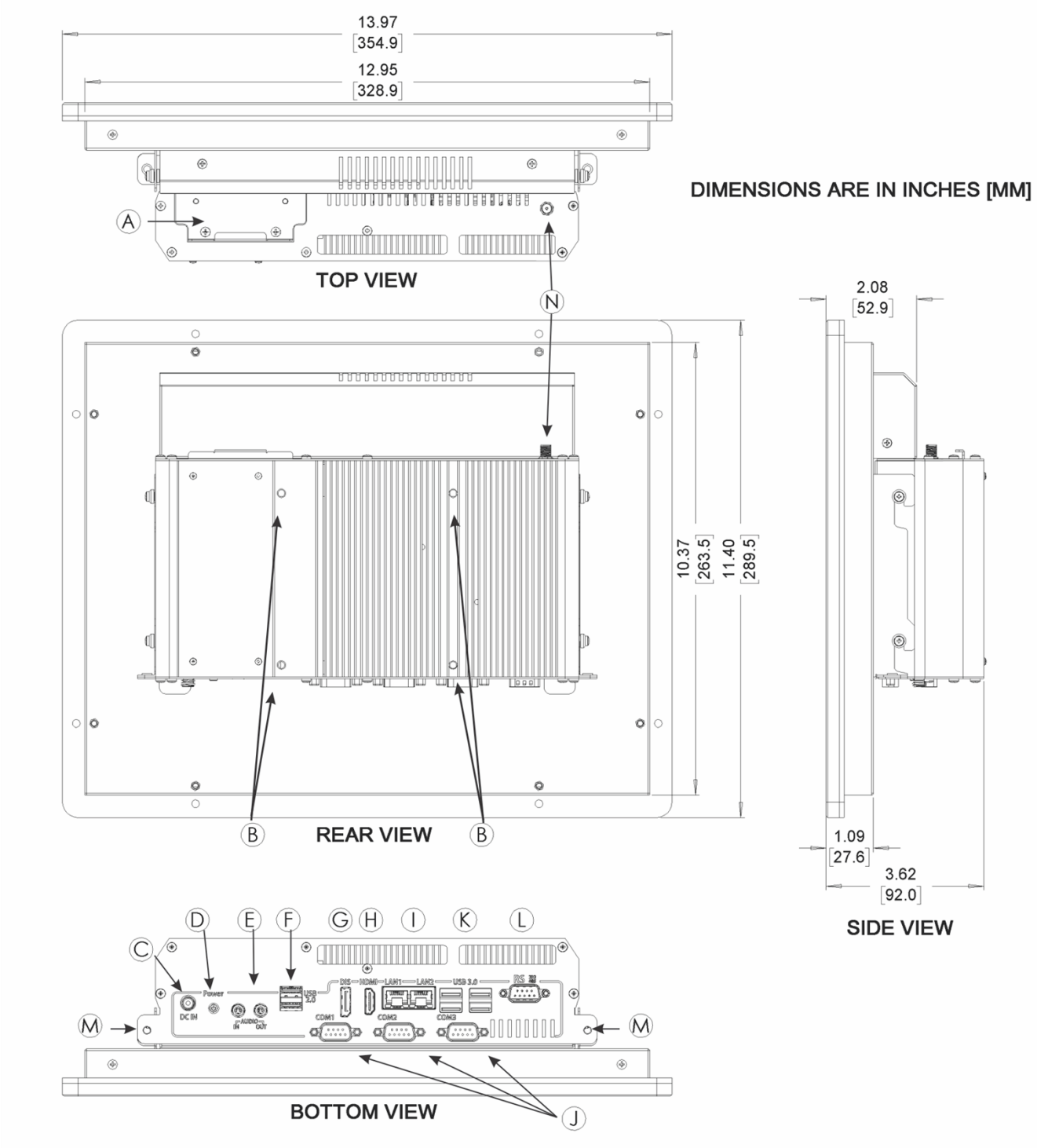

A	Solid State Drive Bay	**H**	HDMI® Output
B	VESA 100 x 100 mounting	**I**	Gigabit Ethernet Ports
C	DC Input Power Connector	**J**	COM Ports DE9P (RS232)
D	Illuminated Power Button	**K**	USB 3.0 Host Ports
E	3.5mm Audio Ports (Mic-In / Line Out)	**L**	COM Port DE9P (RS232/RS422/RS485 Configurable)
F	USB 2.0 Host Ports	**M**	Thumb-Screw Mounting
G	DisplayPort Output	**N**	Wi-Fi Antenna Connector (Nonfunctional unless Wi-Fi Option Purchased)

PC1316BPH

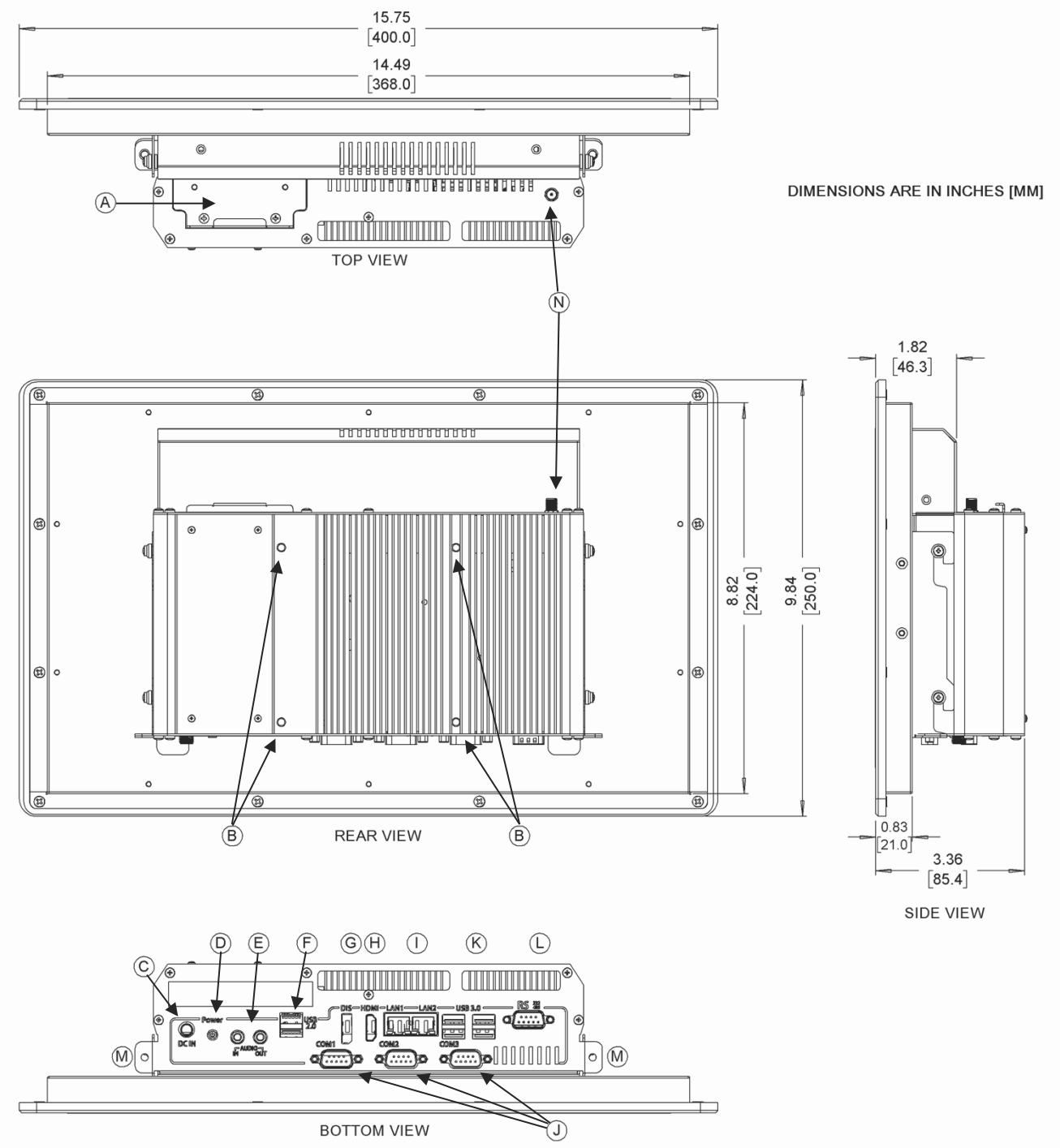

A	Solid State Drive Bay	**H**	HDMI® Output
B	VESA 100 x 100 mounting	**I**	Gigabit Ethernet Ports
C	DC Input Power Connector	**J**	COM Ports DE9P (RS232)
D	Illuminated Power Button	**K**	USB 3.0 Host Ports
E	3.5mm Audio Ports (Mic-In / Line Out)	**L**	COM Port DE9P (RS232/RS422/RS485 Configurable)
F	USB 2.0 Host Ports	**M**	Thumb-Screw Mounting
G	DisplayPort Output	**N**	Wi-Fi Antenna Connector (Nonfunctional unless Wi-Fi Option Purchased)

PC1317BPH

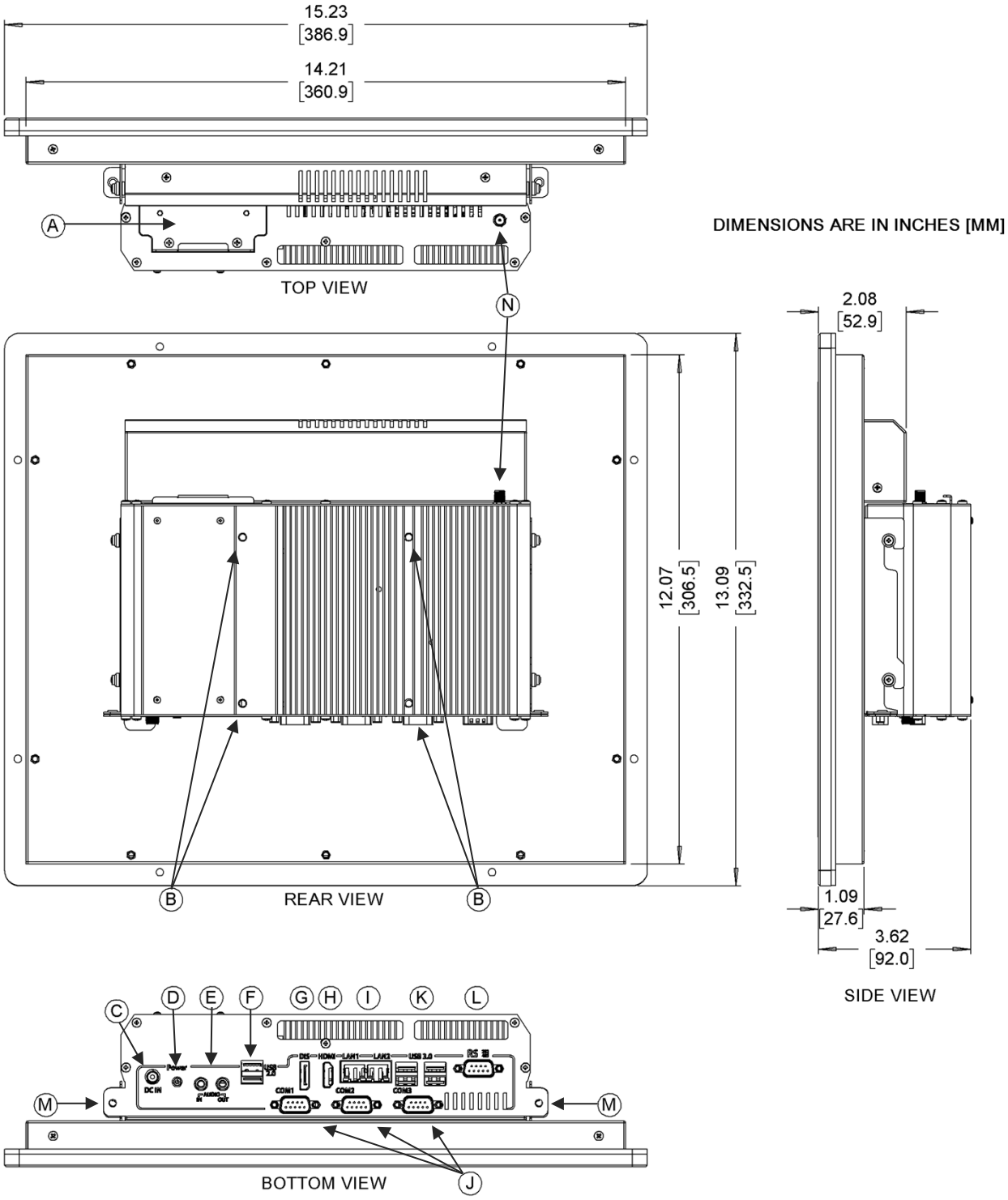

A	Solid State Drive Bay
B	VESA 100 x 100 mounting
C	DC Input Power Connector
D	Illuminated Power Button
E	3.5mm Audio Ports (Mic-In / Line Out)
F	USB 2.0 Host Ports
G	DisplayPort Output
H	HDMI® Output
I	Gigabit Ethernet Ports
J	COM Ports DE9P (RS232)
K	USB 3.0 Host Ports
L	COM Port DE9P (RS232/RS422/RS485 Configurable)
M	Thumb-Screw Mounting
N	Wi-Fi Antenna Connector (Nonfunctional unless Wi-Fi Option Purchased)

PC1319BPH

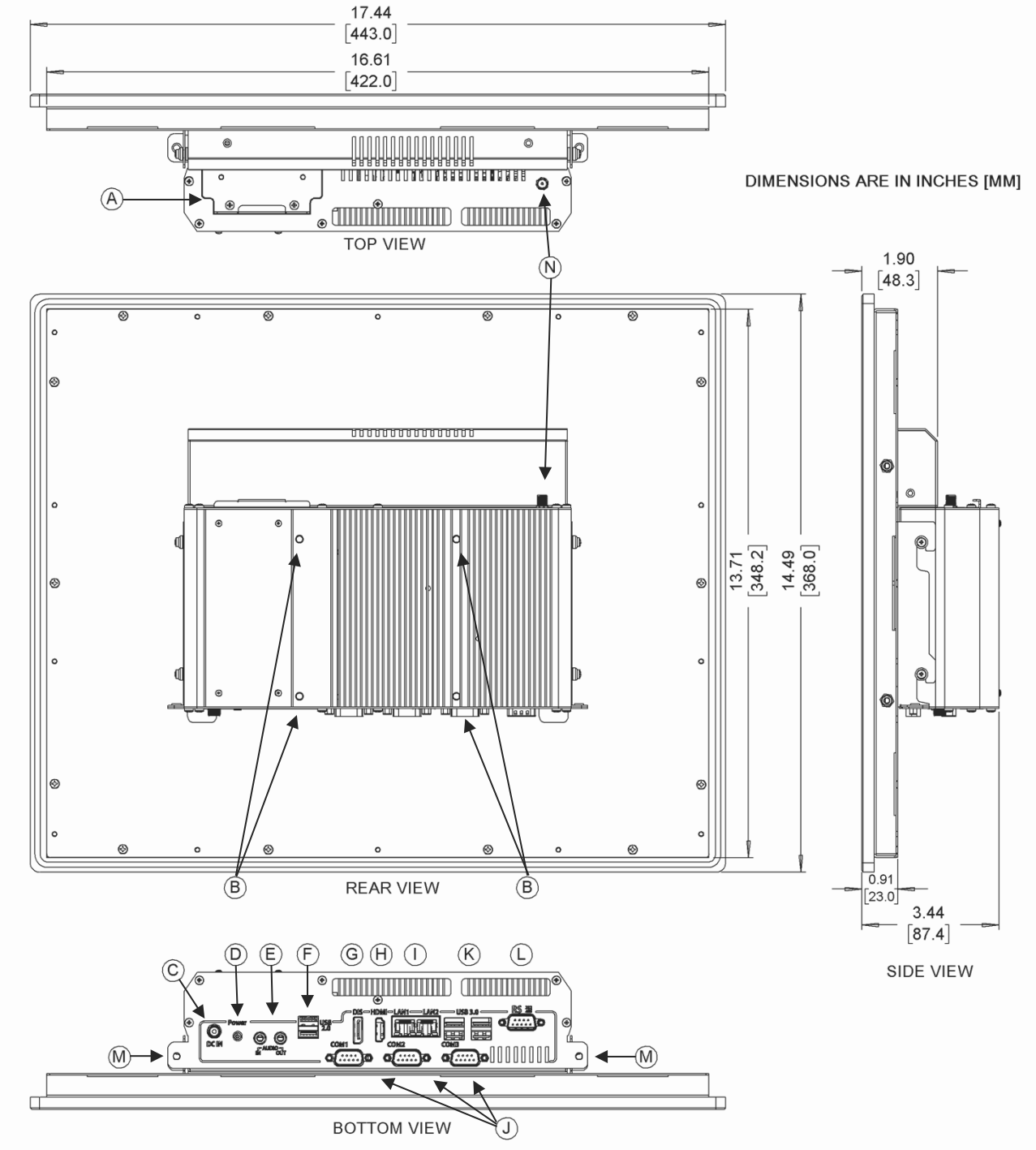

A	Solid State Drive Bay	**H**	HDMI® Output
B	VESA 100 x 100 mounting	**I**	Gigabit Ethernet Ports
C	DC Input Power Connector	**J**	COM Ports DE9P (RS232)
D	Illuminated Power Button	**K**	USB 3.0 Host Ports
E	3.5mm Audio Ports (Mic-In / Line Out)	**L**	COM Port DE9P (RS232/RS422/RS485 Configurable)
F	USB 2.0 Host Ports	**M**	Thumb-Screw Mounting
G	DisplayPort Output	**N**	Wi-Fi Antenna Connector (Nonfunctional unless Wi-Fi Option Purchased)

PC1321BPHv2

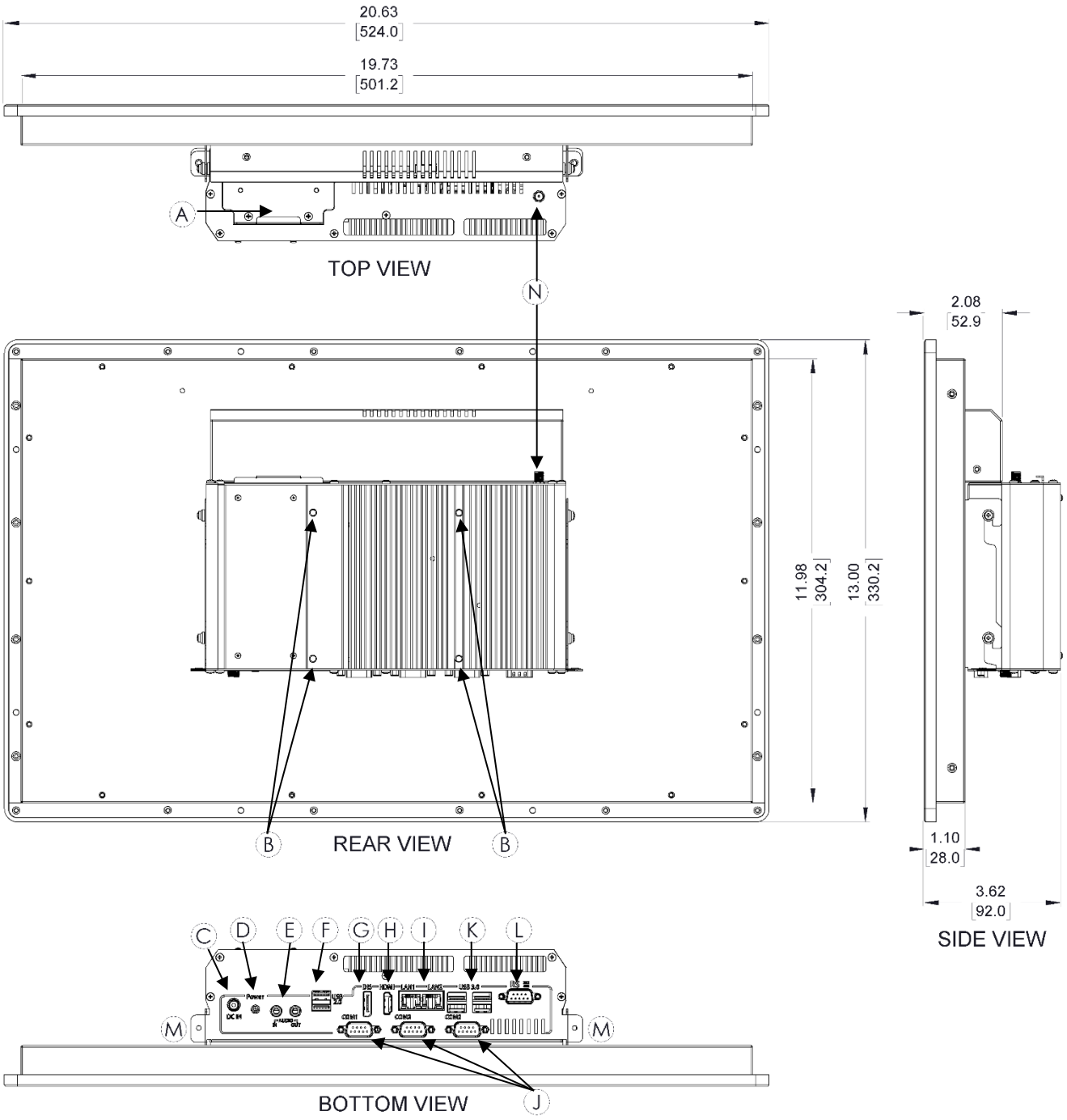

A	Solid State Drive Bay	**H**	HDMI® Output
B	VESA 100 x 100 mounting	**I**	Gigabit Ethernet Ports
C	DC Input Power Connector	**J**	COM Ports DE9P (RS232)
D	Illuminated Power Button	**K**	USB 3.0 Host Ports
E	3.5mm Audio Ports (Mic-In / Line Out)	**L**	COM Port DE9P (RS232/RS422/RS485 Configurable)
F	USB 2.0 Host Ports	**M**	Thumb-Screw Mounting
G	DisplayPort Output	**N**	Wi-Fi Antenna Connector (Nonfunctional unless Wi-Fi Option Purchased)

Engineers and Integrators Trust Maple Systems

Control your factory, monitor your data, and connect your world with Maple Systems Industrial Panel Mount, Rack Mount, Media Player, and Box PCs! All of our Industrial PCs are ideal for applications in Industrial Automation, Manufacturing, Data Centers, Factory Automation, Food & Beverage Processing, Pharmaceuticals, Water and Wastewater Treatment, and Packaging and Material Handling operations. Wide selection, fast delivery, strong warranty—we're your complete IPC partner.

Serving Industries Around the World

Why an environment-first approach works

All our Industrial PCs are ideal for applications in industrial automation, healthcare, manufacturing, oil & gas, packaging, building automation, water, energy, agriculture, food & beverage, and more. Our offerings include high brightness/sunlight readable displays, extended temperature IPCs, stainless steel enclosures, and Class I, Div 2 certified IPCs. Learn more about the industries we serve and discover why more and more companies are choosing Maple Systems.





Why Choose an Industrial PC

Heavy duty computing in industrial settings

The difference between an industrial PC and consumer PC can be hard to spot. Industrial PCs are built for the toughest environments where debris, moisture, temperatures, and vibrations are extremely volatile. Our PCs are engineered for efficiency and can withstand environments that would quickly wear down standard hardware. Consumer PCs are more basic machines and lack the durability to survive these conditions.

Customize To Meet Your Needs

Maximize efficiency

Companies have chosen Maple Systems solutions over Allen-Bradley, Omron, Siemens, Panasonic, and so many others, in hundreds of applications, in every industry, and in every type of organization. Our Industrial PCs are designed to resolve your toughest automation challenges in manufacturing, processing, and fabrication environments, and because we offer thousands of different configurations, designing an IPC to meet your unique requirements is easy.

Supports Your 3rd Party Software

Replace expensive proprietary hardware

Since our Industrial PCs can be configured with either a Windows™ or Linux™ Operating System, adding your own software is easy. Don't be tied to expensive industrial computers or HMIs just because of a name. Our IPCs support FactoryTalk®, Ignition SCADA®, Emerson Ovation®, Simatic SCADA®, Predator Touch HMI®, and hundreds of other HMI and SCADA software solutions.

Maple Systems

Maple Systems, Inc. | 808 134th St SW, suite 120, Everett, WA 98204 | 425.745.3229 | maplesystems.com

Digital Signage Media Players

Video Walls | Multi-Screen | Open Platform

Bring your digital experience to life with cULus-listed, fanless signage PCs built for reliable 24/7 operation. From single-screen signage and multi-screen installations to video walls with up to four 4K displays, touch-ready kiosks, and AI-enabled edge applications, Maple Systems media players deliver the performance and flexibility to scale, on Windows or Linux, with the freedom to use your preferred CMS or digital signage platform. We've partnered with Nimbus808 as our preferred digital signage software.





Rack Mount Industrial PCs

Save Space | Scalability | Reliable

Maple Systems Rack Mount PCs are engineered to bring high-density performance and rugged reliability directly to your server racks. Built for 24/7 continuous deployment in mission-critical environments, these purpose-built industrial PCs deliver the computing power, thermal efficient, and hardware stability your digital infrastructure demands. These high-performance PCs utilize standardized, heavy-duty chassis footprints to maximize vertical rack space while facilitating seamless integration with existing server cabinets.

Class 1 Division 2 Industrial PCs

Rugged | Stainless Steel | Certified

Our Class 1 Div 2 Industrial PCs for hazardous locations are ATEx, IECEx certified. These industrial computers offer an intrinsically safe design which is ignition and explosion proof, perfect for applications in oil, gas, petrochemical, and mining. With a high performance optically bonded, capacitive touchscreen that feature 1000nits*, they are perfect for your light intensive environments.





Standardizing SCADA Communications with Maple Systems Components

From simple stand-alone machines to sophisticated multi-device networked production lines, Maple Systems solutions empower your facility with enterprise-level operations and IIoT functionalities. Leveraging advanced cloud connectivity, Maple Systems hardware and software assist with:

- Logging data from your devices using Maple Systems, smart HMIs and gateways to aid in reporting, improve efficiency, and reduce downtime.
- Planning routine maintenance with ease by tracking system health metrics directly on Maple Systems HMIs and rugged Tablets.
- Adding advanced IIoT functionality via built-in support for MQTT, OPC UA, native Ignition server integration, and secure SQL databases like MySQL or Microsoft SQL Server.

The right Maple Systems products can help you standardize communications between legacy and modern devices, gluing disparate systems together to create a single, unified source for your SCADA ecosystem. There is no need to completely redesign your entire application. Keep the components that are already working for you, and simply add Maple Systems components to grow your abilities to supervise, control, and acquire data.

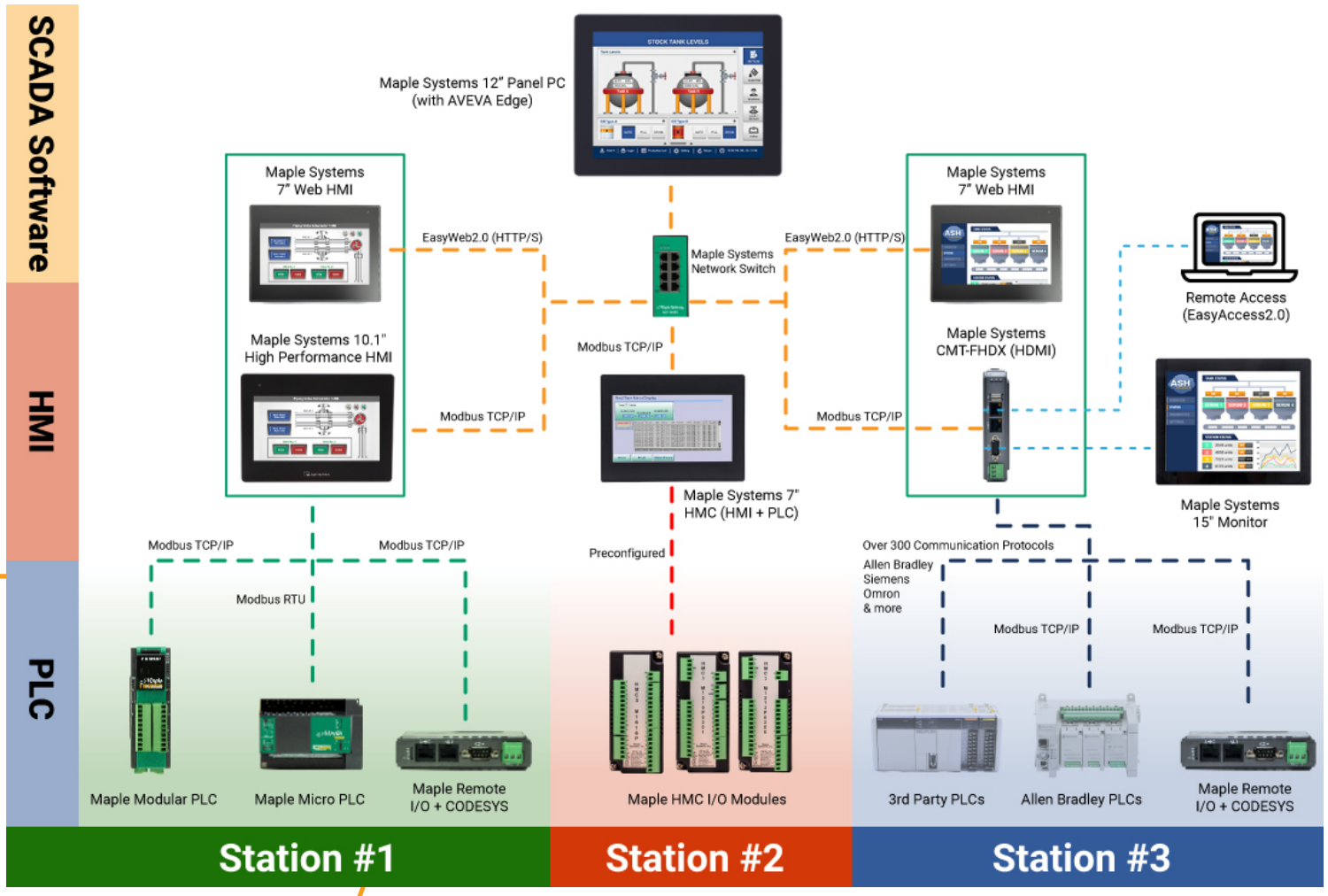

Industrial Automation and Control Solutions

Imagine a system that seamlessly integrates real-time monitoring, intelligent control, and invaluable data analytics that can boost productivity, efficiency, and overall performance. That's the transformative capabilities of Maple Systems products and US-based technical sales and support.



HMIs

IIoT Control for Smart Factories

Our HMIs have enhanced software features such as remote access, data handling, security, recipes, email, and more. IIoT support for MQTT, Sparkplug B, Ignition SQL, and OPC UA. Class 1, Div 2 options available.



PLCs

Modular and Micro Series

Our PLCs provide an affordable combination of function and control in a cost-effective package. Programmed with our FREE control software, MapleLogic, that features high-speed counters, positioning control, input module filtering, PID control, and more, depending on the model.



Industrial PCs

Panel, Box, Rackmount, Media Player

Our Industrial PCs are full-strength, fan-less industrial computers with the power to support your SCADA software. Customize to meet your requirements: CPU, storage, memory, OS, and wifi upgrades available.



HMI + PLCs

Combining HMI and PLC functionality

These HMCs are powerful HMIs with I/O and supports high-speed counters and timers, provides serial, Ethernet communications, and support IEC programming. Class I, Division 2. Remote access options available.



Industrial Monitors

High Brightness, Wide Temp Options

Pair a Capacitive Touchscreen Monitor with one of our Industrial Box PCs or HDMI-enabled HMI to expand your project's capabilities. High brightness (1000nit), Wide-Temp, and Class I Division 2 options available.



Rugged Tablets

Durability, Performance, and Mobility

Built for industrial environments and certified to MIL-STD-810H military standards, these tablets feature waterproof enclosures with Gorilla Glass displays that protect against dust, water, and extreme temperatures.



Network Switches

Industrial Grade Components

Our network switches provide a high level of immunity against EMI and EMS found in industrial environments; and include features such as ESD Protection, Surge Protection, and Short Circuit Protection to ensure continuous operation in unstable power conditions. Unmanaged and managed switches available.



HTML5 Web HMI

Versatile and secure access to any web page

Web HMIs come standard with a built-in Chromium Browser, HTML5 Powered, IP66, Class I, Div 2 rating, ensuring intuitive interaction that enables users to access the same web content across many platforms.



Tower Stack Lights

Flash patterns and buzzer functions

Tower stack lights / Signal Towers provide high-visibility visual and audible signaling for clear machine status indication, safety alerts, and efficient industrial communication.



Pushbuttons

Dependable control for electrical and automation systems

Choose momentary or maintained action with options for illuminated, selector, emergency stop, and toggle designs.



Power Supplies

DIN Rail Mountable

Maple Systems DIN rail power supplies convert AC line voltage into clean, regulated DC for the PLCs, HMIs, I/O, sensors, relays and valves in your control panel.



PID Controllers

Precise, reliable process control

The right PID controller helps maintain your target setpoint, minimize process variation, and keep your operation running smoothly. Our PID Controllers combine auto-tuning, fuzzy logic PID control for industrial process and temperature applications.

Knowledge Base

Guides, tutorials, and documentation

Technical guides and how-to articles for Maple Systems products. Resources and configuration guides including programming basics, setup, communication protocols, software deployment, networking, and so much more!

Schedule a call with one of our product specialists today