# PC1300AP Series

## 10.4” – 27.5” Fanless Panel PC with Intel® Dual Core™ i3-7100U/i5-7300U/i7-7600U Processor



- High Resolution Capacitive Touch Screen
- Multiple Memory and Storage Options Available
- Windows® 10, Windows® 11, Linux® OS Options
- Optional Wi-Fi Upgrade
- Panel or VESA mount
- Integrate with AVEVA EDGE® SCADA Solution

| | | | | | |
|---|---|---|---|---|---|
| **System** | **CPU** | Intel® 7th Generation Dual Core™ : | i3-7100U @ 2.4GHz<br>i5-7300U @ 2.6GHz<br>i7-7600U @ 2.8GHz | | |
| | **System Memory Options** | 2 x DDR4 260-pin SO-DIMM Non-ECC RAM (4, 8, 16, 32 GB) | | | |
| **I/O Ports** | **USB** | 2 x USB 2.0 type A<br>4 x USB 3.0 type A | | | |
| | **Serial** | 1 x RS-232/422/485 DE-9P, COM1 (default RS-232)<br>3 x RS-232 DE-9P, COM2/COM3/COM4 | | | |
| | **Audio** | 1 x 3.5 mm Line-out<br>1 x 3.5 mm Mic-in | | | |
| | **LAN** | 2 x GbE RJ-45 | | | |
| | **Power** | DC power input jack, thumbscrew secured. | | | |
| | **Power Switch** | 1 x Momentary Pushbutton with Integrated LED | | | |
| | **External Display Connector** | 1 x DisplayPort 1.2<br>1 x HDMI® 1.4a | | | |
| **Storage** | **Solid State Drive Options*** | 1 x 2.5” SATA III, MLC (64, 128, 256, 512 GB, 1TB SSD) | | | |
| | **SD Card Slot** | N/A | | | |
| **Expansion** | **Expansion Slot** | Optional Wi-Fi kit (Wi-Fi card and antenna) | | | |
| **Touch Screen** | **Type** | Projected Capacitive Touch | | | |
| | **Interface** | USB | | | |
| **Display** | **Display Type** | **10.4” TFT XGA LCD** | **12.1” TFT XGA LCD** | **15” TFT XGA LCD** | **15.6” Widescreen TFT FHD LCD** |
| | **Max. Resolution** | 1024 X 768 | 1024 X 768 | 1024 x 768 | 1920 x 1080 |
| | **Max. Color** | 16.2 M | 16.2 M | 16.2 M | 16.2 M |
| | **Luminance (cd/m²)** | 350 | 500 | 300 | 450 |
| | **View Angle (H°/V°)** | 170/170 | 170/170 | 170/160 | 170/170 |
| | **Contrast Ratio** | 1000:1 | 700:1 | 2000:1 | 500:1 |
| | **Backlight Lifetime (Hours)** | 50,000+ | 50,000+ | 50,000+ | 50,000+ |
| **Electrical** | **Input Voltage** | 9~24 VDC | 9~24 VDC | 9~24 VDC | 9~24 VDC |
| | **Input Current** | 1.66~4.44 A | 1.71~4.56 A | 1.79~4.78 A | 1.63~4.33 A |
| | **Input Power** | 40W | 41 W | 43 W | 39 W |
| **Mechanical** | **Dimension (W x H x D)** | 11.57 x 8.90 x 3.62” [294 x 226 x 92 mm] | 12.48 x 9.65 x 3.62” [317 x 245 x 92 mm] | 13.97 x 11.40 x 3.62” [354.9 x 289.5 x 92 mm] | 15.75 x 9.84 x 3.36” [400 x 250 x 85.4 mm] |
| | **Net Weight** | 8.38 lbs [3.8 kg] | 9.04 lbs [4.1 kg] | 11.46 lbs [5.2 kg] | 11.46 lbs [5.2 kg] |
| | **Panel Cutout Dimensions (W x H)** | 10.63 x 7.95” [270 x 202 mm] | 11.54 x 8.70” [293 x 221 mm] | 13.03 x 10.47” [331 x 266 mm] | 14.57 x 8.90” [370 x 226 mm] |
| | **Mounting** | Panel mounting, VESA 100 x 100 | | | |
| | **Construction** | Steel Chassis, Aluminum Heatsink and Front Bezel | | | |
| | **Rating** | IP65 compliant front panel, NEMA 4 when panel mounted | | | |
| **Environmental** | **Operating Temperature** | 32~140°F [0~60°C] | | | |
| | **Storage Temperature** | -22~175°F [-30~80°C] | | | |
| | **Storage Humidity** | 10 to 90% @ 40°C, non-condensing | | | |
| | **Shock Resistance** | 10G acceleration peak to peak, 11ms duration | | | |
| | **Vibration Resistance** | 5~17 Hz, 0.1” double amplitude peak to peak, 1.5G acceleration peak to peak | | | |
| | **Certifications** | CE / FCC Class B / RoHS | | | |
| **Operating System** | **Microsoft Windows® Options** | Microsoft Windows® 10 IoT Enterprise Embedded LTSC 64-bit (EPKEA)<br>Microsoft Windows® 10 IoT Enterprise LTSC 64-bit (PKEA)<br>Microsoft Windows® 11 IoT Enterprise Embedded LTSC 64-bit (EPKEA)<br>Microsoft Windows® 11 IoT Enterprise LTSC 64-bit (PKEA)<br>Microsoft Windows® 11 Professional | | | |
| | **Linux® Options** | Linux® Ubuntu Desktop | | | |
| **Notes** | Specifications subject to change without notice. | | | | |

# PC1300AP Series



## 10.4” – 27.5” Fanless Panel PC with Intel® Dual Core™ i3-7100U/i5-7300U/i7-7600U Processor

- High Resolution Capacitive Touch Screen
- Multiple Memory and Storage Options Available
- Windows® 10, Windows® 11, Linux® OS Options
- Optional Wi-Fi Upgrade
- Panel or VESA mount
- Integrate with AVEVA EDGE® SCADA Solution

| | | | | | |
|---|---|---|---|---|---|
| **System** | **CPU** | Intel® 7th Generation Dual Core™ : i3-7100U @ 2.4GHz<br>i5-7300U @ 2.6GHz<br>i7-7600U @ 2.8GHz | | | |
| | **System Memory Options** | 2 x DDR4 260-pin SO-DIMM Non-ECC RAM (4, 8, 16, 32 GB) | | | |
| **I/O Ports** | **USB** | 2 x USB 2.0 type A<br>4 x USB 3.0 type A | | | |
| | **Serial** | 1 x RS-232/422/485 DE-9P, COM1 (default RS-232)<br>3 x RS-232 DE-9P, COM2/COM3/COM4 | | | |
| | **Audio** | 1 x 3.5 mm Line-out<br>1 x 3.5 mm Mic-in | | | |
| | **LAN** | 2 x GbE RJ-45 | | | |
| | **Power** | DC power input jack, thumbscrew secured. | | | |
| | **Power Switch** | 1 x Momentary Pushbutton with Integrated LED | | | |
| | **External Display Connector** | 1 x DisplayPort 1.2<br>1 x HDMI® 1.4a | | | |
| **Storage** | **Solid State Drive Options*** | 1 x 2.5” SATA III, MLC (64, 128, 256, 512 GB, 1TB SSD) | | | |
| | **SD Card Slot** | N/A | | | |
| **Expansion** | **Expansion Slot** | Optional Wi-Fi kit (Wi-Fi card and antenna) | | | |
| **Touch Screen** | **Type** | Projected Capacitive Touch | | | |
| | **Interface** | USB | | | |
| **Display** | **Display Type** | **17” TFT SXGA LCD** | **19” TFT SXGA LCD** | **21.5” Widescreen TFT FHD LCD** | **27” TFT XVGA LCD** |
| | **Max. Resolution** | 1280 x 1024 | 1280 x 1024 | 1920 x 1080 | 1920 x 1080 |
| | **Max. Color** | 16.2 M | 16.2 M | 16.2 M | 16.2 M |
| | **Luminance (cd/m²)** | 250 | 350 | 250 | 300 |
| | **View Angle (H°/V°)** | 160/160 | 170/160 | 170/160 | 178/178 |
| | **Contrast Ratio** | 1000:1 | 1000:1 | 3000:1 | 1000:1 |
| | **Backlight Lifetime (Hours)** | 50,000+ | 30,000+ | 50,000+ | 30,000+ |
| **Electrical** | **Input Voltage** | 9~24 VDC | 9~24 VDC | 9~24 VDC | 9~24 VDC |
| | **Input Current** | 1.92~5.11 A | 1.98~5.28 A | 2.13~5.67 A | 2.35~6.27 A |
| | **Input Power** | 46 W | 47.5 W | 51 W | 56.40 W |
| **Mechanical** | **Dimension (W x H x D)** | 15.23 x 13.09 x 3.62” [386.9 x 332.5 x 92 mm] | 17.44 x 14.49 x 3.44” [443 x 368 x 87.4 mm] | 20.63 x 13.00 x 3.62” [524 x 330.2 x 92 mm] | 25.77 x 15.54 x 3.38” [654.6 x 394.8 x 85.9 mm] |
| | **Net Weight** | 13.67 lbs [6.2 kg] | 18.52 lbs [8.4 kg] | 18.74 lbs [8.5 kg] | 20.75 lbs [9.41 kg] |
| | **Panel Cutout Dimensions (W x H)** | 14.29 x 12.17” [363 x 309 mm] | 16.69 x 13.82” [424 x 351 mm] | 19.82 x 12.09” [503.5 x 307 mm] | 24.69 x 14.45” [627 x 367 mm] |
| | **Mounting** | Panel mounting, VESA 100 x 100 | | | |
| | **Construction** | Black Steel Chassis, Aluminum Heatsink | | | |
| | **Rating** | IP65 compliant front panel, NEMA 4 when panel mounted | | | |
| **Environmental** | **Operating Temperature** | 32~140°F [0~60°C] | | | |
| | **Storage Temperature** | -22~175°F [-30~80°C] | | | |
| | **Storage Humidity** | 10 to 90% @ 40°C, non-condensing | | | |
| | **Shock Resistance** | 10G acceleration peak to peak, 11ms duration | | | |
| | **Vibration Resistance** | 5~17 Hz, 0.1” double amplitude peak to peak, 1.5G acceleration peak to peak | | | |
| | **Certifications** | CE / FCC Class B / RoHS | | | |
| **Operating System** | **Microsoft Windows® Options** | Microsoft Windows® 10 IoT Enterprise Embedded LTSC 64-bit (EPKEA)<br>Microsoft Windows® 10 IoT Enterprise LTSC 64-bit (PKEA)<br>Microsoft Windows® 11 IoT Enterprise Embedded LTSC 64-bit (EPKEA)<br>Microsoft Windows® 11 IoT Enterprise LTSC 64-bit (PKEA)<br>Microsoft Windows® 11 Professional | | | |
| | **Linux® Options** | Linux® Ubuntu Desktop | | | |
| **Notes** | Specifications subject to change without notice. | | | | |

## PC1310AP

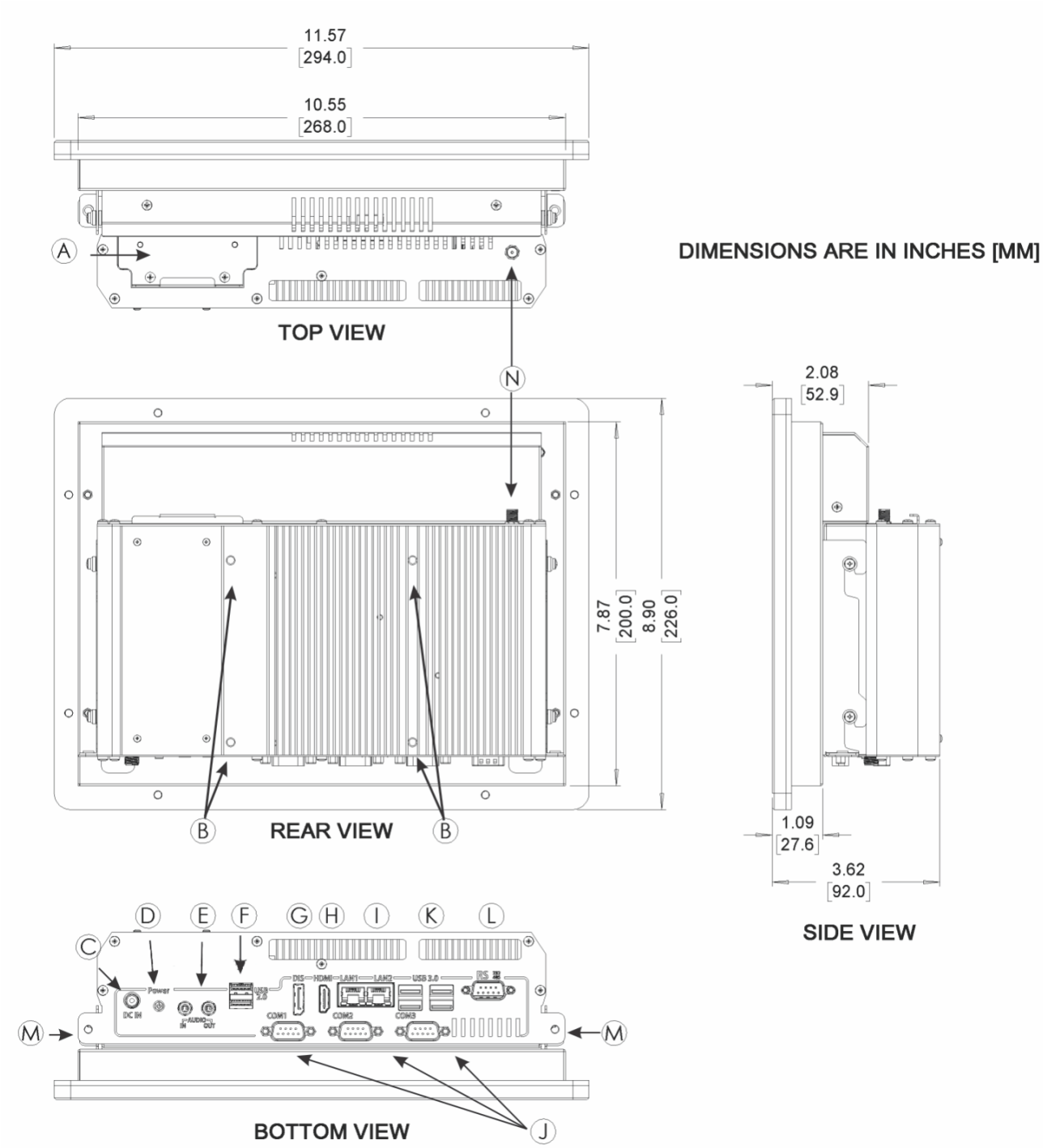


| | | | |
|---|---|---|---|
| **A** | Solid State Drive Bay | **H** | HDMI® Output |
| **B** | VESA 100 x 100 mounting | **I** | Gigabit Ethernet Ports |
| **C** | DC Input Power Connector | **J** | COM Ports DE9P (RS232) |
| **D** | Illuminated Power Button | **K** | USB 3.0 Host Ports |
| **E** | 3.5mm Audio Ports (Mic-In / Line Out) | **L** | COM Port DE9P (RS232/RS422/RS485 Configurable) |
| **F** | USB 2.0 Host Ports | **M** | Thumb-Screw Mounting |
| **G** | DisplayPort Output | **N** | Wi-Fi Antenna Connector (Nonfunctional unless Wi-Fi Option Purchased) |

## PC1312AP

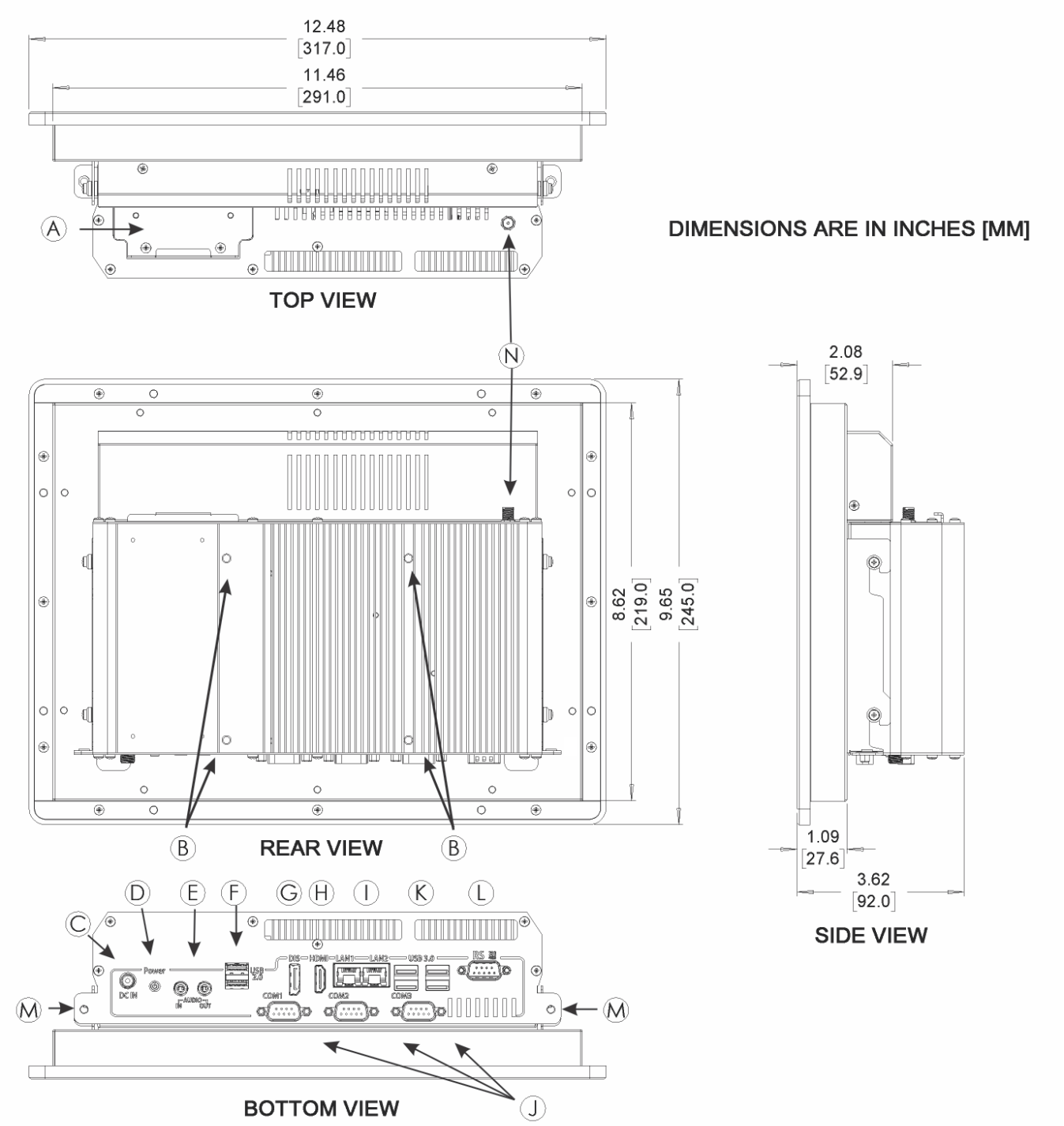


| | | | |
|---|---|---|---|
| **A** | Solid State Drive Bay | **H** | HDMI® Output |
| **B** | VESA 100 x 100 mounting | **I** | Gigabit Ethernet Ports |
| **C** | DC Input Power Connector | **J** | COM Ports DE9P (RS232) |
| **D** | Illuminated Power Button | **K** | USB 3.0 Host Ports |
| **E** | 3.5mm Audio Ports (Mic-In / Line Out) | **L** | COM Port DE9P (RS232/RS422/RS485 Configurable) |
| **F** | USB 2.0 Host Ports | **M** | Thumb-Screw Mounting |
| **G** | DisplayPort Output | **N** | Wi-Fi Antenna Connector (Nonfunctional unless Wi-Fi Option Purchased) |

## PC1315AP

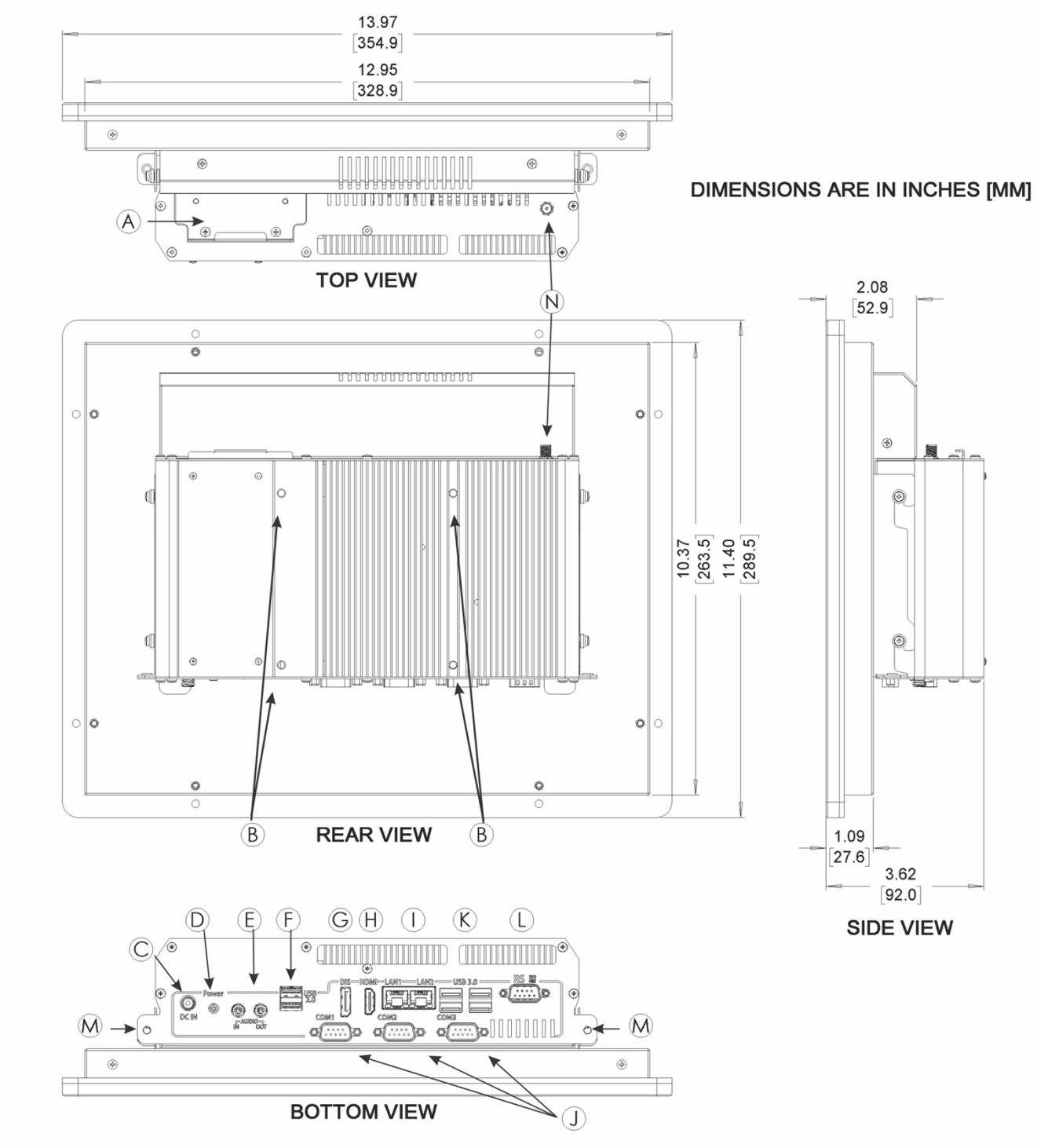


| | | | |
|---|---|---|---|
| **A** | Solid State Drive Bay | **H** | HDMI® Output |
| **B** | VESA 100 x 100 mounting | **I** | Gigabit Ethernet Ports |
| **C** | DC Input Power Connector | **J** | COM Ports DE9P (RS232) |
| **D** | Illuminated Power Button | **K** | USB 3.0 Host Ports |
| **E** | 3.5mm Audio Ports (Mic-In / Line Out) | **L** | COM Port DE9P (RS232/RS422/RS485 Configurable) |
| **F** | USB 2.0 Host Ports | **M** | Thumb-Screw Mounting |
| **G** | DisplayPort Output | **N** | Wi-Fi Antenna Connector (Nonfunctional unless Wi-Fi Option Purchased) |

## PC1316AP

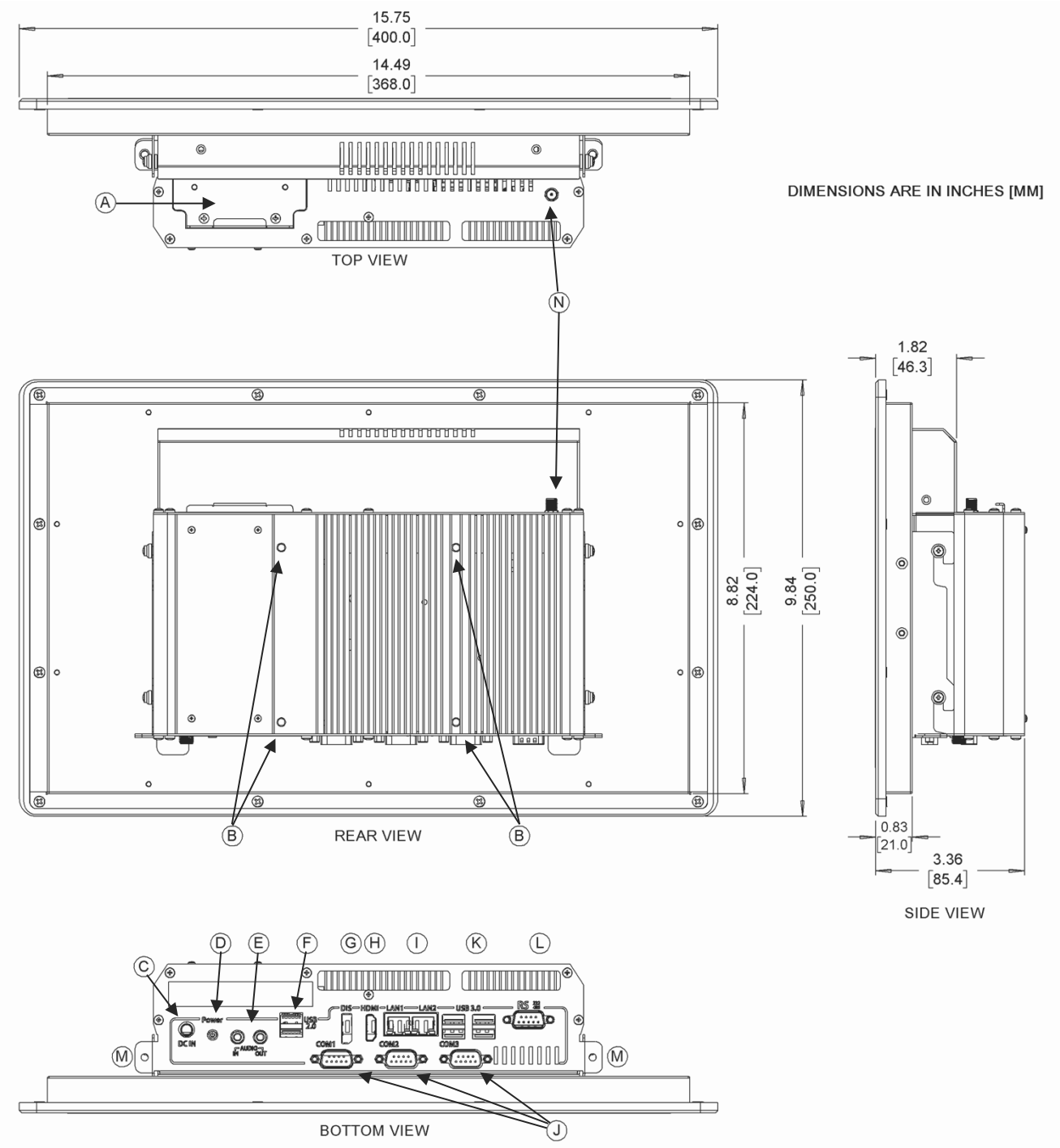


| | | | |
|---|---|---|---|
| **A** | Solid State Drive Bay | **H** | HDMI® Output |
| **B** | VESA 100 x 100 mounting | **I** | Gigabit Ethernet Ports |
| **C** | DC Input Power Connector | **J** | COM Ports DE9P (RS232) |
| **D** | Illuminated Power Button | **K** | USB 3.0 Host Ports |
| **E** | 3.5mm Audio Ports (Mic-In / Line Out) | **L** | COM Port DE9P (RS232/RS422/RS485 Configurable) |
| **F** | USB 2.0 Host Ports | **M** | Thumb-Screw Mounting |
| **G** | DisplayPort Output | **N** | Wi-Fi Antenna Connector (Nonfunctional unless Wi-Fi Option Purchased) |

## PC1317AP

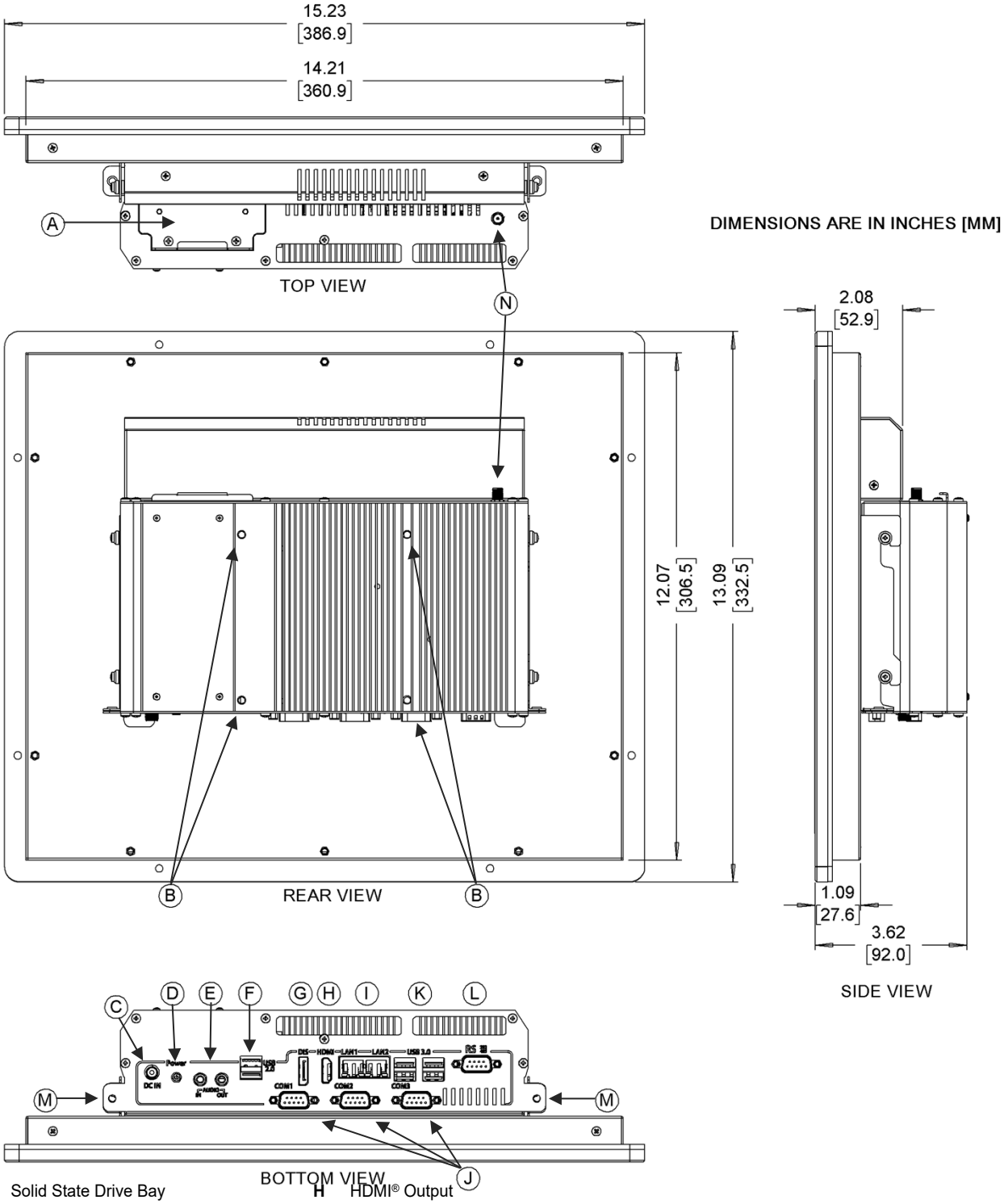


| | | | |
|---|---|---|---|
| **A** | Solid State Drive Bay | **H** | HDMI® Output |
| **B** | VESA 100 x 100 mounting | **I** | Gigabit Ethernet Ports |
| **C** | DC Input Power Connector | **J** | COM Ports DE9P (RS232) |
| **D** | Illuminated Power Button | **K** | USB 3.0 Host Ports |
| **E** | 3.5mm Audio Ports (Mic-In / Line Out) | **L** | COM Port DE9P (RS232/RS422/RS485 Configurable) |
| **F** | USB 2.0 Host Ports | **M** | Thumb-Screw Mounting |
| **G** | DisplayPort Output | **N** | Wi-Fi Antenna Connector (Nonfunctional unless Wi-Fi Option Purchased) |

## PC1319AP

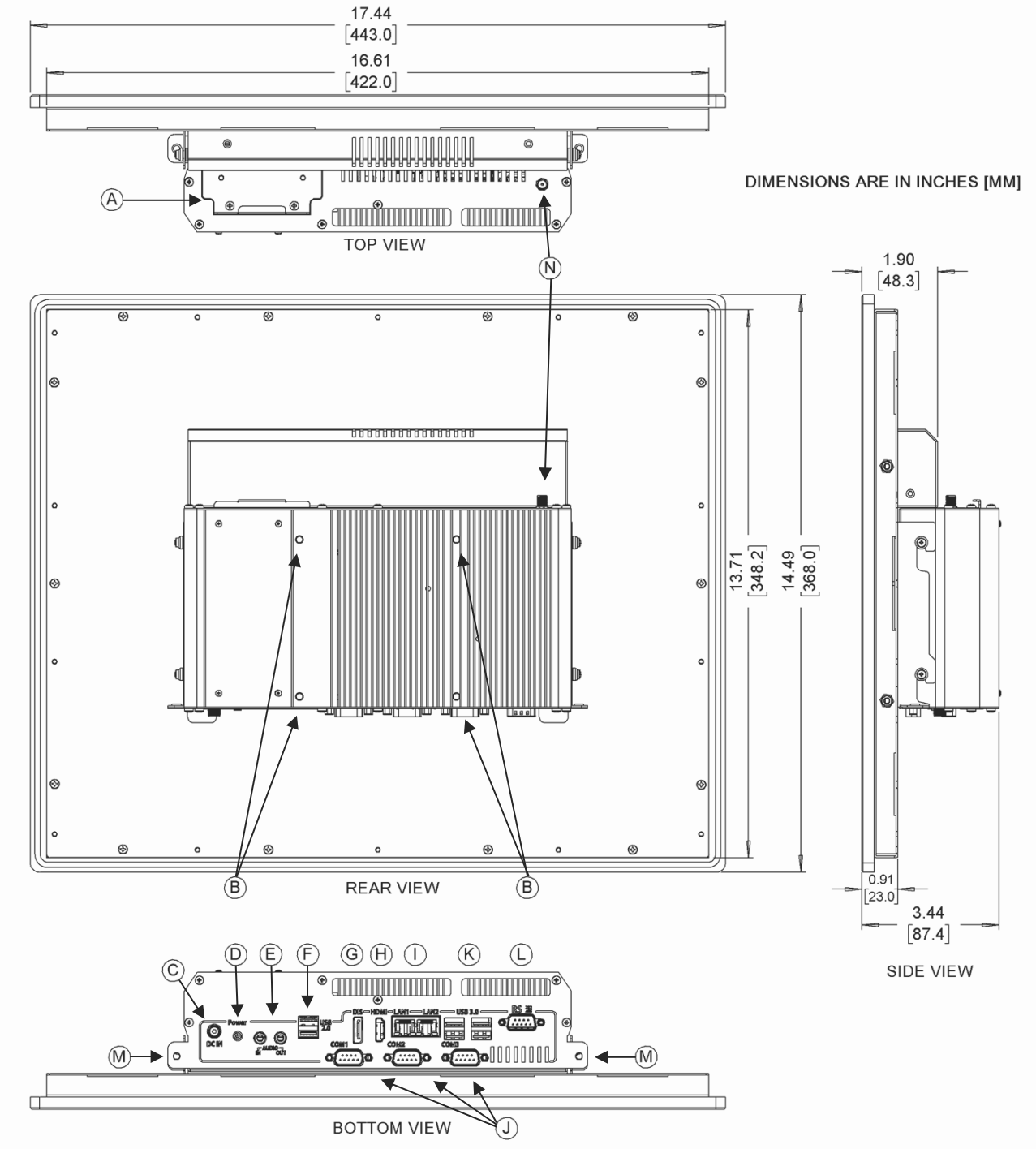


| | | | |
|---|---|---|---|
| **A** | Solid State Drive Bay | **H** | HDMI® Output |
| **B** | VESA 100 x 100 mounting | **I** | Gigabit Ethernet Ports |
| **C** | DC Input Power Connector | **J** | COM Ports DE9P (RS232) |
| **D** | Illuminated Power Button | **K** | USB 3.0 Host Ports |
| **E** | 3.5mm Audio Ports (Mic-In / Line Out) | **L** | COM Port DE9P (RS232/RS422/RS485 Configurable) |
| **F** | USB 2.0 Host Ports | **M** | Thumb-Screw Mounting |
| **G** | DisplayPort Output | **N** | Wi-Fi Antenna Connector (Nonfunctional unless Wi-Fi Option Purchased) |

## PC1321APv2

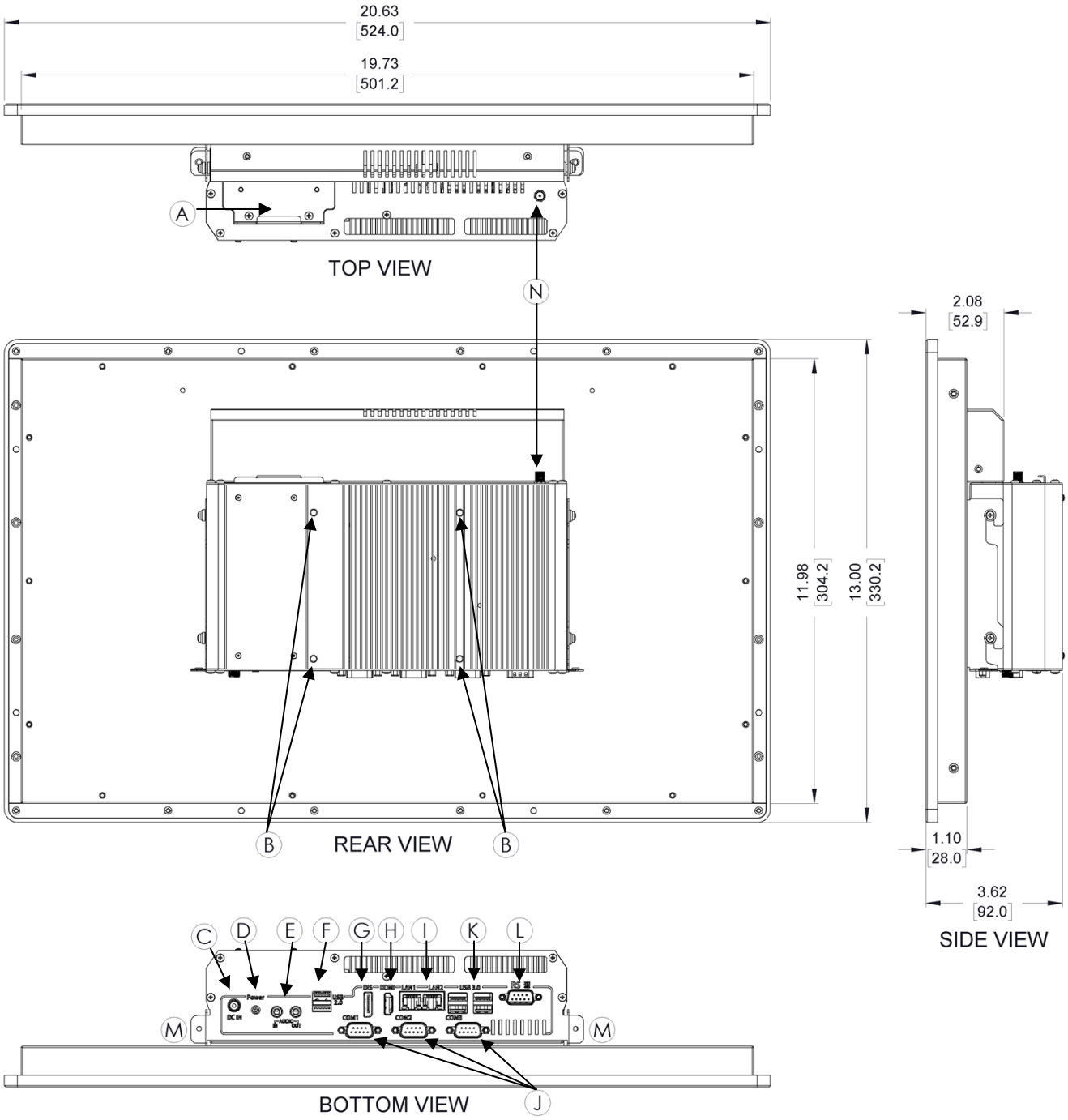


| | | | |
|---|---|---|---|
| **A** | Solid State Drive Bay | **H** | HDMI® Output |
| **B** | VESA 100 x 100 mounting | **I** | Gigabit Ethernet Ports |
| **C** | DC Input Power Connector | **J** | COM Ports DE9P (RS232) |
| **D** | Illuminated Power Button | **K** | USB 3.0 Host Ports |
| **E** | 3.5mm Audio Ports (Mic-In / Line Out) | **L** | COM Port DE9P (RS232/RS422/RS485 Configurable) |
| **F** | USB 2.0 Host Ports | **M** | Thumb-Screw Mounting |
| **G** | DisplayPort Output | **N** | Wi-Fi Antenna Connector (Non-functional unless Wi-Fi Option Purchased) |

## PC1327AP

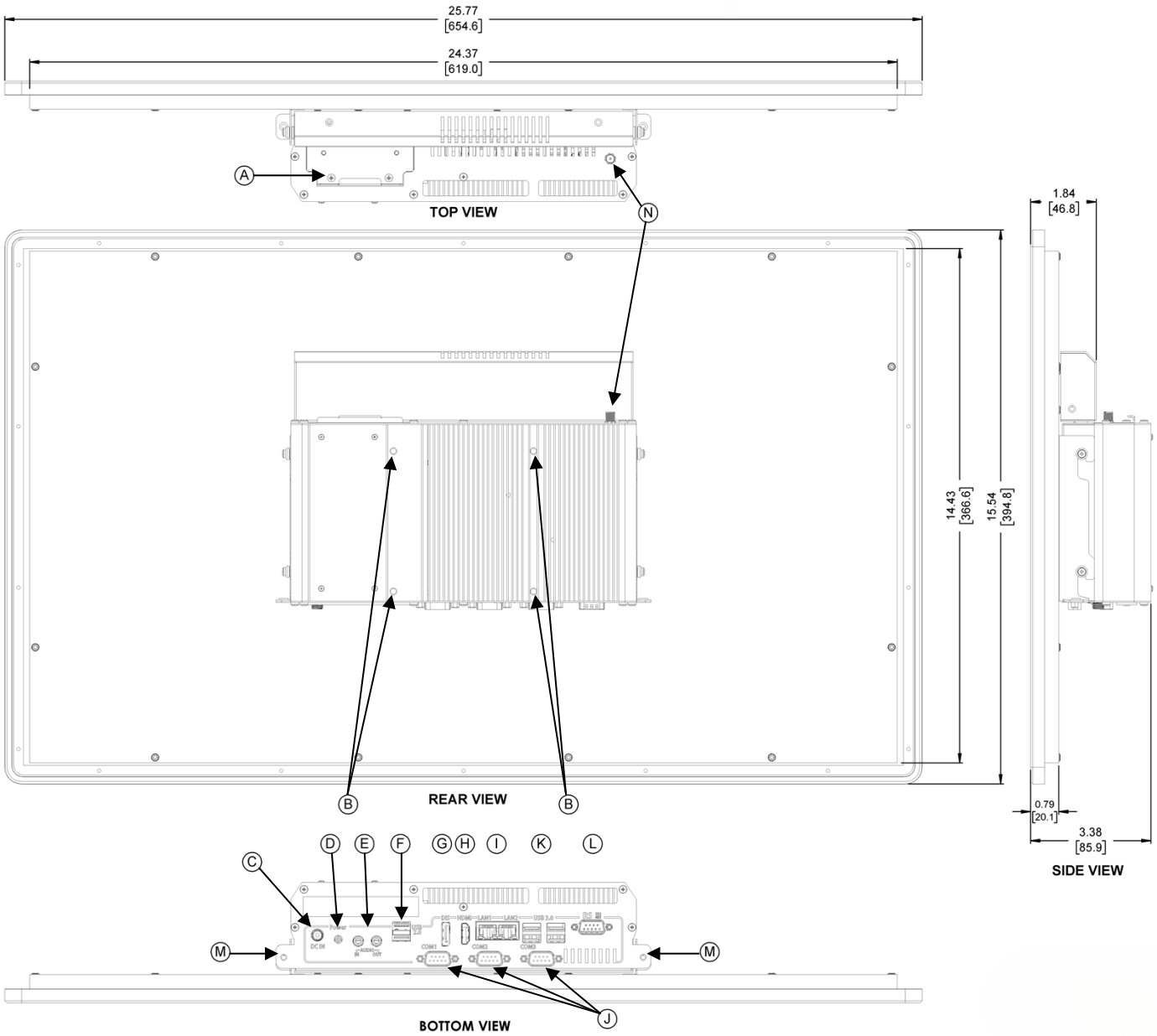


| | | | |
|---|---|---|---|
| **A** | Solid State Drive Bay | **H** | HDMI® Output |
| **B** | VESA 100 x 100 mounting | **I** | Gigabit Ethernet Ports |
| **C** | DC Input Power Connector | **J** | COM Ports DE9P (RS232) |
| **D** | Illuminated Power Button | **K** | USB 3.0 Host Ports |
| **E** | 3.5mm Audio Ports (Mic-In / Line Out) | **L** | COM Port DE9P (RS232/RS422/RS485 Configurable) |
| **F** | USB 2.0 Host Ports | **M** | Thumb-Screw Mounting |
| **G** | DisplayPort Output | **N** | Wi-Fi Antenna Connector (Non-functional unless Wi-Fi Option Purchased) |

# Engineers and Integrators Trust Maple Systems

Control your factory, monitor your data, and connect your world with Maple Systems Industrial Panel Mount, Rack Mount, Media Player, and Box PCs! All of our Industrial PCs are ideal for applications in Industrial Automation, Manufacturing, Data Centers, Factory Automation, Food & Beverage Processing, Pharmaceuticals, Water and Wastewater Treatment, and Packaging and Material Handling operations. Wide selection, fast delivery, strong warranty—we're your complete IPC partner.

## Serving Industries Around the World

### Why an environment-first approach works

All our Industrial PCs are ideal for applications in industrial automation, healthcare, manufacturing, oil & gas, packaging, building automation, water, energy, agriculture, food & beverage, and more. Our offerings include high brightness/sunlight readable displays, extended temperature IPCs, stainless steel enclosures, and Class I, Div 2 certified IPCs. Learn more about the industries we serve and discover why more and more companies are choosing Maple Systems.






## Why Choose an Industrial PC

### Heavy duty computing in industrial settings

The difference between an industrial PC and consumer PC can be hard to spot. Industrial PCs are built for the toughest environments where debris, moisture, temperatures, and vibrations are extremely volatile. Our PCs are engineered for efficiency and can withstand environments that would quickly wear down standard hardware. Consumer PCs are more basic machines and lack the durability to survive these conditions.

## Customize To Meet Your Needs

### Maximize efficiency

Companies have chosen Maple Systems solutions over Allen-Bradley, Omron, Siemens, Panasonic, and so many others, in hundreds of applications, in every industry, and in every type of organization. Our Industrial PCs are designed to resolve your toughest automation challenges in manufacturing, processing, and fabrication environments, and because we offer thousands of different configurations, designing an IPC to meet your unique requirements is easy.

## Supports Your 3rd Party Software

### Replace expensive proprietary hardware

Since our Industrial PCs can be configured with either a Windows™ or Linux™ Operating System, adding your own software is easy. Don't be tied to expensive industrial computers or HMIs just because of a name. Our IPCs support FactoryTalk®, Ignition SCADA®, Emerson Ovation®, Simatic SCADA®, Predator Touch HMI®, and hundreds of other HMI and SCADA software solutions.

Maple Systems

Maple Systems, Inc. | 808 134th St SW, suite 120, Everett, WA 98204 | 425.745.3229 | maplesystems.com

# Digital Signage Media Players

**Video Walls | Multi-Screen | Open Platform**

Bring your digital experience to life with cULus-listed, fanless signage PCs built for reliable 24/7 operation. From single-screen signage and multi-screen installations to video walls with up to four 4K displays, touch-ready kiosks, and AI-enabled edge applications, Maple Systems media players deliver the performance and flexibility to scale, on Windows or Linux, with the freedom to use your preferred CMS or digital signage platform. We've partnered with Nimbus808 as our preferred digital signage software.






## Rack Mount Industrial PCs

**Save Space | Scalability | Reliable**

Maple Systems Rack Mount PCs are engineered to bring high-density performance and rugged reliability directly to your server racks. Built for 24/7 continuous deployment in mission-critical environments, these purpose-built industrial PCs deliver the computing power, thermal efficient, and hardware stability your digital infrastructure demands. These high-performance PCs utilize standardized, heavy-duty chassis footprints to maximize vertical rack space while facilitating seamless integration with existing server cabinets.

## Class 1 Division 2 Industrial PCs

**Rugged | Stainless Steel | Certified**

Our Class 1 Div 2 Industrial PCs for hazardous locations are ATEx, IECEx certified. These industrial computers offer an intrinsically safe design which is ignition and explosion proof, perfect for applications in oil, gas, petrochemical, and mining. With a high performance optically bonded, capacitive touchscreen that feature 1000nits*, they are perfect for your light intensive environments.





# Standardizing SCADA Communications with Maple Systems Components

From simple stand-alone machines to sophisticated multi-device networked production lines, Maple Systems solutions empower your facility with enterprise-level operations and IIoT functionalities. Leveraging advanced cloud connectivity, Maple Systems hardware and software assist with:

- Logging data from your devices using Maple Systems, smart HMIs and gateways to aid in reporting, improve efficiency, and reduce downtime.
- Planning routine maintenance with ease by tracking system health metrics directly on Maple Systems HMIs and rugged Tablets.
- Adding advanced IIoT functionality via built-in support for MQTT, OPC UA, native Ignition server integration, and secure SQL databases like MySQL or Microsoft SQL Server.

The right Maple Systems products can help you standardize communications between legacy and modern devices, gluing disparate systems together to create a single, unified source for your SCADA ecosystem. There is no need to completely redesign your entire application. Keep the components that are already working for you, and simply add Maple Systems components to grow your abilities to supervise, control, and acquire data.

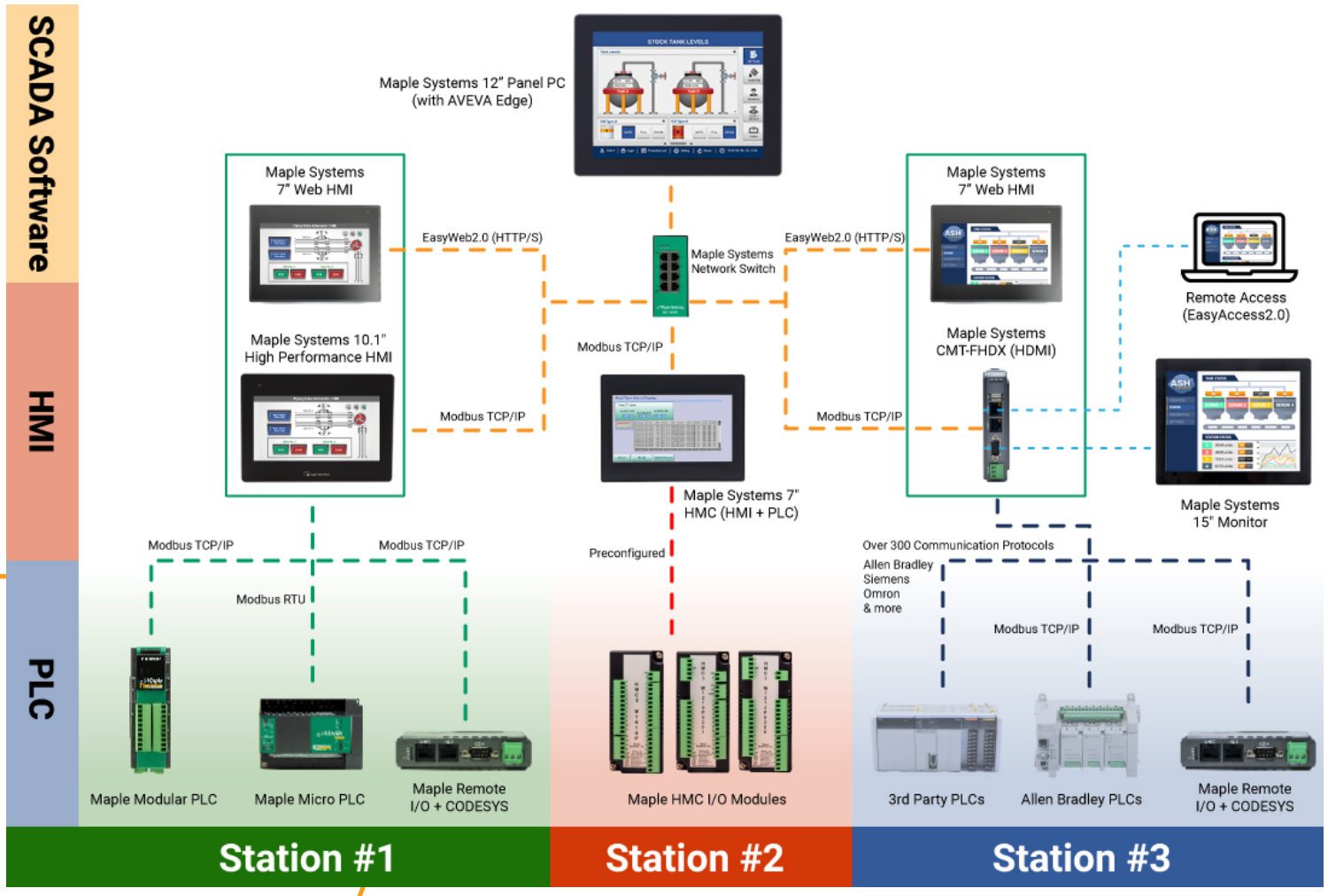

# Industrial Automation and Control Solutions

Imagine a system that seamlessly integrates real-time monitoring, intelligent control, and invaluable data analytics that can boost productivity, efficiency, and overall performance. That's the transformative capabilities of Maple Systems products and US-based technical sales and support.



## HMIs

**IIoT Control for Smart Factories**

Our HMIs have enhanced software features such as remote access, data handling, security, recipes, email, and more. IIoT support for MQTT, Sparkplug B, Ignition SQL, and OPC UA. Class 1, Div 2 options available.



## PLCs

**Modular and Micro Series**

Our PLCs provide an affordable combination of function and control in a cost-effective package. Programmed with our FREE control software, MapleLogic, that features high-speed counters, positioning control, input module filtering, PID control, and more, depending on the model.



## Industrial PCs

**Panel, Box, Rackmount, Media Player**

Our Industrial PCs are full-strength, fan-less industrial computers with the power to support your SCADA software. Customize to meet your requirements: CPU, storage, memory, OS, and wifi upgrades available.



## HMI + PLCs

**Combining HMI and PLC functionality**

These HMCs are powerful HMIs with I/O and supports high-speed counters and timers, provides serial, Ethernet communications, and support IEC programming. Class I, Division 2. Remote access options available.



## Industrial Monitors

**High Brightness, Wide Temp Options**

Pair a Capacitive Touchscreen Monitor with one of our Industrial Box PCs or HDMI-enabled HMI to expand your project's capabilities. High brightness (1000nit), Wide-Temp, and Class I Division 2 options available.



## Rugged Tablets

**Durability, Performance, and Mobility**

Built for industrial environments and certified to MIL-STD-810H military standards, these tablets feature waterproof enclosures with Gorilla Glass displays that protect against dust, water, and extreme temperatures.



## Network Switches

**Industrial Grade Components**

Our network switches provide a high level of immunity against EMI and EMS found in industrial environments; and include features such as ESD Protection, Surge Protection, and Short Circuit Protection to ensure continuous operation in unstable power conditions. Unmanaged and managed switches available.



## HTML5 Web HMI

**Versatile and secure access to any web page**

Web HMIs come standard with a built-in Chromium Browser, HTML5 Powered, IP66, Class I, Div 2 rating, ensuring intuitive interaction that enables users to access the same web content across many platforms.




## Tower Stack Lights

**Flash patterns and buzzer functions**

Tower stack lights / Signal Towers provide high-visibility visual and audible signaling for clear machine status indication, safety alerts, and efficient industrial communication.



## Pushbuttons

**Dependable control for electrical and automation systems**

Choose momentary or maintained action with options for illuminated, selector, emergency stop, and toggle designs.



## Power Supplies

**DIN Rail Mountable**

Maple Systems DIN rail power supplies convert AC line voltage into clean, regulated DC for the PLCs, HMIs, I/O, sensors, relays and valves in your control panel.



## PID Controllers

**Precise, reliable process control**

The right PID controller helps maintain your target setpoint, minimize process variation, and keep your operation running smoothly. Our PID Controllers combine auto-tuning, fuzzy logic PID control for industrial process and temperature applications.

## Knowledge Base

**Guides, tutorials, and documentation**

Technical guides and how-to articles for Maple Systems products. Resources and configuration guides including programming basics, setup, communication protocols, software deployment, networking, and so much more!

Schedule a call with one of our product specialists today