

7.0” ~ 23.8” Fanless Industrial Panel PC With Intel® Celeron® J6412 Processor

- UL Listed
- Microsoft Windows® 10, 11, Linux® OS Options
- Projected Capacitive and Resistive Touch
- Rugged IP66 Rated Aluminum Enclosure
- Wake on LAN Supported (WOL)

System	**CPU**	**Intel® Celeron™ ElkHart Lake™ J6412 Quad-Core 2.0 GHz Processor**			
	System Chipset	SoC			
	System Memory Options	1x DDR4 260-pin SO-DIMM RAM (8, 16, 32 GB)			
	TPM Chip	Yes (TPM 2.0 onboard)			
I/O Ports	**USB**	2 x USB 3.2 type A	2 x USB 2.0 type A 2 x USB 3.2 type A		
	Serial	1 x DE9P RS-232/422/485, COM1 (default RS-232)	1 x DE9P RS-232/422/485, COM1 (default RS-232) 1 x DE9P RS-232, COM2		
	Audio	1 x 3.5 mm line out			
	LAN	1 x GbE RJ-45 1 x 2.5 GbE RJ-45			
	Wireless LAN	2 x Wireless LAN Antenna ports (covered unless optional Wi-Fi Expansion kit purchased)			
	Power	3-pin Terminal Block type, DC power input			
	Remote Power Switch	N/A			
	External Display	1 x DisplayPort 1.4 (max 4096 x 2160 pixels @ 60Hz)			
Expansion	**Expansion Slot**	Optional Wi-Fi kit (IEEE802.11ax card and 2 x antenna, Bluetooth 5.2 Support)			
Touch Screen	**Type**	Projected Capacitive Touch (Multi-Touch Supported)			
	Interface	USB			
	Light Transmission	90+%			
Display	**Display Type**	**7.0” WVGA TFT LCD**	**8.0” SVGA TFT LCD**	**10.1” WXGA TFT LCD**	**12.1” XGA TFT LCD**
	Max. Resolution	800 x 480	800 x 600	1280 x 800	1024 x 768
	Max. Color	262K	262K	16.7M	16.2M
	Luminance (cd/m²)	350	450	350	500
	View Angle (H°/V°)	160/160	140/130	170/170	178/178
	Contrast Ratio	1000:1	500:1	800:1	1000:1
	Backlight Lifetime (hours)	40,000+	40,000+	30,000+	30,000+
Storage	**Solid State Drive Type**	1 x M.2 2280 3D TLC SATA3			
	Solid State Drive Capacity Options	128, 256, 512 GB, 1 TB, 2 TB SSD			
	SD Card Slot	N/A			
Electrical	**Input Voltage**	9-36 VDC	9-36 VDC	9-36 VDC	9-36 VDC
	Input Current	0.92-3.68 A	0.87-3.48 A	1.23-4.92 A	1.43-5.72 A
	Input Power (max.)	33.12 W	31.32 W	44.28 W	51.48 W
Mechanical	**Dimensions (W x H x D)**	7.95 x 5.87 x 2.28” [202 x 149 x 58 mm]	9.09 x 6.93 x 2.72” [231 x 176 x 69 mm]	11.22 x 7.44 x 2.95” [285 x 189 x 75 mm]	12.56 x 9.65 x 3.03” [319 x 245 x 77 mm]
	Net Weight	~ 2.98 lbs [1.35 kg]	~ 4.85 lbs [2.2 kg]	~ 5.95 lbs [2.7 kg]	~ 7.28 lbs [3.3 kg]
	Panel Cutout Dimensions (W x H)	7.56 x 5.43” [192 x 138 mm]	8.74 x 6.57” [222 x 167 mm]	10.71 x 6.93” [272 x 176 mm]	11.93 x 9.02” [303 x 229 mm]
	Mounting	Panel mounting, VESA 75 x 75 mm		Panel mounting, VESA 100 x 100 mm	
	Construction	Die-cast Aluminum			
Environmental	**Operating Temperature**	-4~140°F [-20~60°C]			
	Storage Temperature	-22~158°F [-30~70°C]			
	Relative Humidity	10 to 95% @ 40°C, non-condensing			
	Altitude (Air Pressure)	Up to 2,000 Meters (~80 kPa)			
	Shock Resistance	Tested to IEC 60068-2-27 (2008): 15G acceleration peak to peak, XYZ axis, 11ms pulse duration			
	Vibration Resistance	Tested to IEC 60068-2-64 (2019): 5~500Hz, 1.0 G_{rms}, XYZ axis, 30 mins duration			
	Rating	IP66 / NEMA 4 when panel mounted			
	Certification	cULus / CE / FCC Class A / RoHS			
Operating System Options	**Microsoft Windows® Options**	Microsoft Windows® 10 IoT Enterprise Embedded LTSC 64-bit (EPKEA) Microsoft Windows® 10 IoT Enterprise LTSC 64-bit (PKEA) Microsoft Windows® 11 IoT Enterprise Embedded LTSC 64-bit (EPKEA) Microsoft Windows® 11 IoT Enterprise LTSC 64-bit (PKEA) Microsoft Windows® 11 Professional			
	Linux® Options	Linux® Ubuntu Desktop			
Notes	Specifications subject to change without notice.				



7.0” ~ 23.8” Fanless Industrial Panel PC With Intel® Celeron® J6412 Processor

- UL Listed
- Microsoft Windows® 10, 11, Linux® OS Options
- Projected Capacitive and Resistive Touch
- Rugged IP66 Rated Aluminum Enclosure
- Wake on LAN Supported (WOL)

System	**CPU**	**Intel® Celeron™ ElkHart Lake™ J6412 Quad-Core 2.0 GHz Processor**			
	System Chipset	SoC			
	System Memory Options	1x DDR4 260-pin SO-DIMM RAM (8, 16, 32 GB)			
	TPM Chip	Yes (TPM 2.0 onboard)			
I/O Ports	**USB**	2 x USB 2.0 type A 2 x USB 3.2 type A			
	Serial	1 x DE9P RS-232/422/485, COM1 (default RS-232) 1 x DE9P RS-232, COM2			
	Audio	1 x 3.5 mm line out			
	LAN	1 x GbE RJ-45 1 x 2.5 GbE RJ-45			
	Wireless LAN	2 x Wireless LAN Antenna ports (covered unless optional Wi-Fi Expansion kit purchased)			
	Power	3-pin Terminal Block type, DC power input			
	Remote Power Switch	N/A			
	External Display	1 x DisplayPort 1.4 (max 4096 x 2160 pixels @ 60Hz)			
Expansion	**Expansion Slot**	Optional Wi-Fi kit (IEEE802.11ax card and 2 x antenna, Bluetooth 5.2 Support)			
Touch Screen	**Type**	Projected Capacitive (Multi-Touch Supported) or Resistive Touch	Projected Capacitive Touch (Multi-Touch Supported)	Projected Capacitive (Multi-Touch Supported) or Resistive Touch	Projected Capacitive Touch (Multi-Touch Supported)
	Interface	USB			
	Light Transmission	90+%			
Display	**Display Type**	**15.0” XGA TFT LCD**	**15.6” FHD TFT LCD**	**17” SXGA TFT LCD**	**18.5” FHD TFT LCD**
	Max. Resolution	1024 x 768	1920 x 1080	1280 x 1024	1920 x 1080
	Max. Color	16.7M	16.7M	16.7M	16.7M
	Luminance (cd/m²)	350	500	350	350
	View Angle (H°/V°)	178/178	178/178	160/140	178/178
	Contrast Ratio	1000:1	1000:1	1000:1	1000:1
	Backlight Lifetime (hours)	50,000+	50,000+	50,000+	50,000+
Storage	**Solid State Drive Type**	1 x M.2 2280 3D TLC SATA3			
	Solid State Drive Capacity Options	128, 256, 512 GB, 1 TB, 2 TB SSD			
	SD Card Slot	N/A			
Electrical	**Input Voltage**	9-36 VDC	9-36 VDC	9-36 VDC	9-36 VDC
	Input Current	1.47-5.88 A	1.68-6.72 A	1.57-6.28 A	1.95-7.8 A
	Input Power (max).	52.92 W	60.48 W	56.52 W	70.2 W
Mechanical	**Dimensions (W x H x D)**	16.14 x 12.20 x 3.10” [410 x 310 x 78.7 mm]	16.22 x 10.93 x 3.07” [412 x 277.5 x 78 mm]	17.28 x 13.70 x 3.23” [439 x 348 x 82 mm]	19.67 x 12.39 x 3.23” [499.6 x 314.6 x 82 mm]
	Net Weight	~ 11.02 lbs [5 kg]	~ 9.26 lbs [4.2 kg]	~ 13.22 lbs [6 kg]	~ 15.21 lbs [6.9 kg]
	Panel Cutout Dimensions (W x H)	15.43 x 11.50” [392 x 292 mm]	15.51 x 10.24” [394 x 260 mm]	16.61 x 13.03” [422 x 331 mm]	18.98 x 11.69” [482 x 297 mm]
	Mounting	Panel mounting, VESA 100 x 100 mm			
	Construction	Die-cast Aluminum			
Environmental	**Operating Temperature**	-4~140°F [-20~60°C]			
	Storage Temperature	-22~158°F [-30~70°C]			
	Relative Humidity	10 to 95% @ 40°C, non-condensing			
	Altitude (Air Pressure)	Up to 2,000 Meters (~80 kPa)			
	Shock Resistance	Tested to IEC 60068-2-27 (2008): 15G acceleration peak to peak, XYZ axis, 11ms pulse duration			
	Vibration Resistance	Tested to IEC 60068-2-64 (2019): 5~500Hz, 1.0 G_{rms}, XYZ axis, 30 mins duration			
	Rating	IP66 / NEMA 4 when panel mounted			
	Certification	cULus / CE / FCC Class A / RoHS			
Operating System Options	**Microsoft Windows® Options**	Microsoft Windows® 10 IoT Enterprise Embedded LTSC 64-bit (EPKEA) Microsoft Windows® 10 IoT Enterprise LTSC 64-bit (PKEA) Microsoft Windows® 11 IoT Enterprise Embedded LTSC 64-bit (EPKEA) Microsoft Windows® 11 IoT Enterprise LTSC 64-bit (PKEA) Microsoft Windows® 11 Professional			
	Linux® Options	N/A for Resistive Linux® Ubuntu Desktop for Capacitive	Linux® Ubuntu Desktop	N/A for Resistive Linux® Ubuntu Desktop for Capacitive	Linux® Ubuntu Desktop
Notes	Specifications subject to change without notice.				



7.0” ~ 23.8” Fanless Industrial Panel PC With Intel® Celeron® J6412 Processor

- UL Listed
- Microsoft Windows® 10, 11, Linux® OS Options
- Projected Capacitive and Resistive Touch
- Rugged IP66 Rated Aluminum Enclosure
- Wake on LAN Supported (WOL)

System	**CPU**	**Intel® Celeron™ ElkHart Lake™ J6412 Quad-Core 2.0 GHz Processor**		
	System Chipset	SoC		
	System Memory Options	1x DDR4 260-pin SO-DIMM RAM (8, 16, 32 GB)		
	TPM Chip	Yes (TPM 2.0 onboard)		
I/O Ports	**USB**	2 x USB 2.0 type A 2 x USB 3.2 type A		
	Serial	1 x DE9P RS-232/422/485, COM1 (default RS-232) 1 x DE9P RS-232, COM2		
	Audio	1 x 3.5 mm line out		
	LAN	1 x GbE RJ-45 1 x 2.5 GbE RJ-45		
	Wireless LAN	2 x Wireless LAN Antenna ports (covered unless optional Wi-Fi Expansion kit purchased)		
	Power	3-pin Terminal Block type, DC power input		
	Remote Power Switch	N/A		
	External Display	1 x DisplayPort 1.4 (max 4096 x 2160 pixels @ 60Hz)		
Expansion	**Expansion Slot**	Optional Wi-Fi kit (IEEE802.11ax card and 2 x antenna, Bluetooth 5.2 Support)		
Touch Screen	**Type**	Projected Capacitive (Multi-Touch Supported) or Resistive Touch	Projected Capacitive Touch (Multi-Touch Supported)	Projected Capacitive Touch (Multi-Touch Supported)
	Interface	USB		
	Light Transmission	90+%		
Display	**Display Type**	**19” SXGA TFT LCD**	**21.5” FHD TFT LCD**	**23.8” FHD TFT LCD**
	Max. Resolution	1280 x 1024	1920 x 1080	1920 x 1080
	Max. Color	16.7M	16.7M	16.7 M
	Luminance (cd/m²)	350	300	250
	View Angle (H°/V°)	170/160	178/178	178/178
	Contrast Ratio	1000:1	1000:1	3000:1
	Backlight Lifetime (hours)	50,000+	50,000+	30,000+
Storage	**Solid State Drive Type**	1 x M.2 2280 3D TLC SATA3		
	Solid State Drive Capacity Options	128, 256, 512 GB, 1 TB, 2 TB SSD		
	SD Card Slot	N/A		
Electrical	**Input Voltage**	9-36 VDC	9-36 VDC	9~36 VDC
	Input Current	1.5-6.0 A	1.88-7.52 A	1.91-7.64 A
	Input Power (max).	54 W	67.68 W	68.76 W
Mechanical	**Dimensions (W x H x D)**	18.43 x 14.96 x 3.23” [468 x 380 x 82 mm]	21.94 x 14.26 x 3.23” [557.3 x 362.3 x 82 mm]	25.20 x 15.55 x 3.46” [640 x 395 x 88 mm]
	Net Weight	~ 15.94 lbs [7.2 kg]	~ 15.21 lbs [6.9 kg]	~ 20.79 lbs [9.4 kg]
	Panel Cutout Dimensions (W x H)	17.72 x 14.25” [450 x 362 mm]	21.22 x 13.54” [539 x 344 mm]	23.62 x 14.25” [600 x 362 mm]
	Mounting	Panel mounting, VESA 100 x 100 mm		
	Construction	Die-cast Aluminum		
Environmental	**Operating Temperature**	-4~140°F [-20~60°C]	32~122°F [0~50°C]	
	Storage Temperature	-22~158°F [-30~70°C]		
	Relative Humidity	10 to 95% @ 40°C, non-condensing		
	Altitude (Air Pressure)	Up to 2,000 Meters (~80 kPa)		
	Shock Resistance	Tested to IEC 60068-2-27 (2008): 15G acceleration peak to peak, XYZ axis, 11ms pulse duration		
	Vibration Resistance	Tested to IEC 60068-2-64 (2019): 5~500Hz, 1.0 G_{rms}, XYZ axis, 30 mins duration		
	Rating	IP66 / NEMA 4 when panel mounted		
	Certification	cULus / CE / FCC Class A / RoHS		
Operating System Options	**Microsoft Windows® Options**	Microsoft Windows® 10 IoT Enterprise Embedded LTSC 64-bit (EPKEA) Microsoft Windows® 10 IoT Enterprise LTSC 64-bit (PKEA) Microsoft Windows® 11 IoT Enterprise Embedded LTSC 64-bit (EPKEA) Microsoft Windows® 11 IoT Enterprise LTSC 64-bit (PKEA) Microsoft Windows® 11 Professional		
	Linux® Options	N/A for Resistive Linux® Ubuntu Desktop for Capacitive	Linux® Ubuntu Desktop	
Notes	Specifications subject to change without notice.			

OMI6807

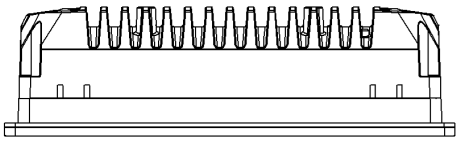

Top View

Dimensions are in inches [mm]

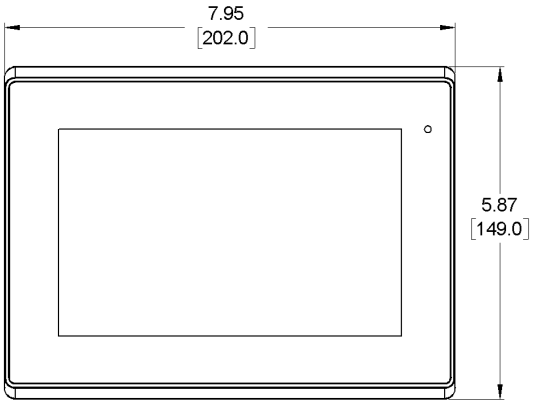

Front View

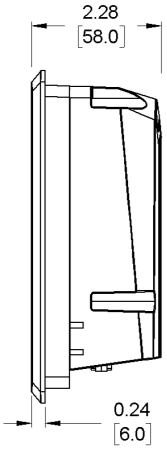

Side View

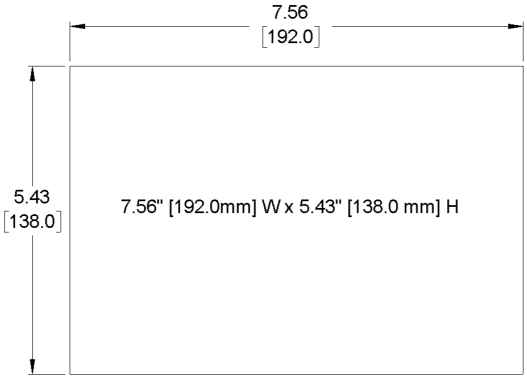

Cutout Dimensions

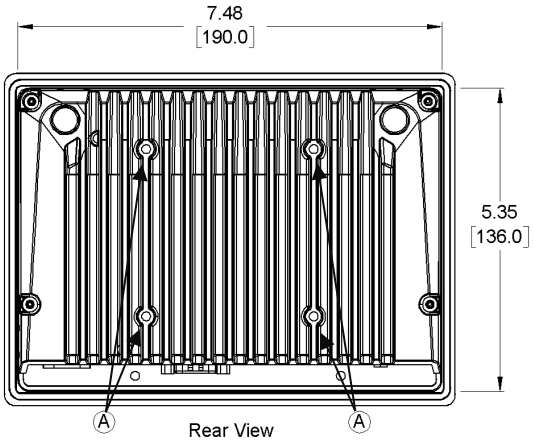

Rear View

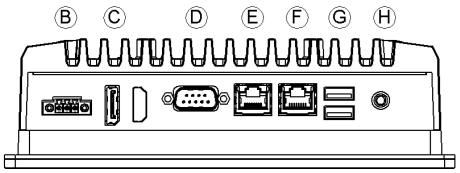

Bottom View

A	VESA 75 mm Screw Holes
B	Power Connector
C	DisplayPort
D	DE9P COM Port (Configurable)
E	2.5 Gigabit Ethernet Port
F	Gigabit Ethernet Port
G	USB 3.2 Host Ports
H	3.5mm Line-Out

OMI6808

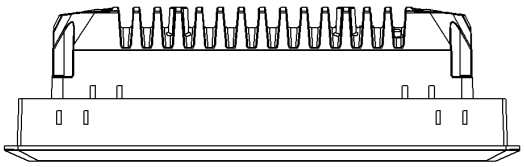

Top View

Dimensions are in inches [mm]

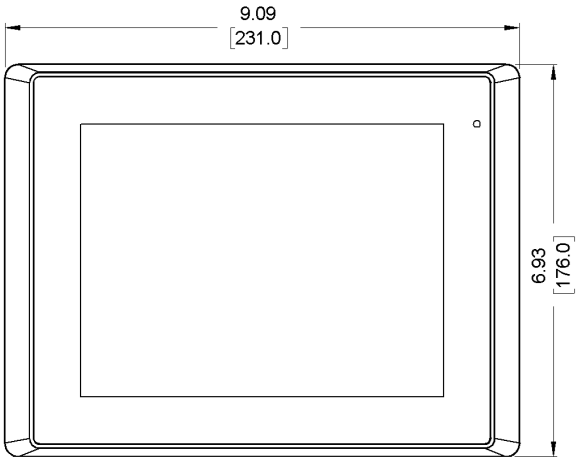

Front View

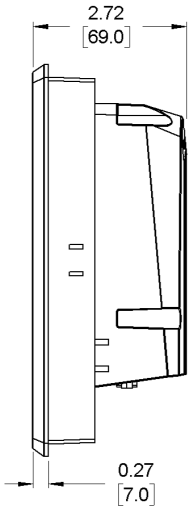

Side View

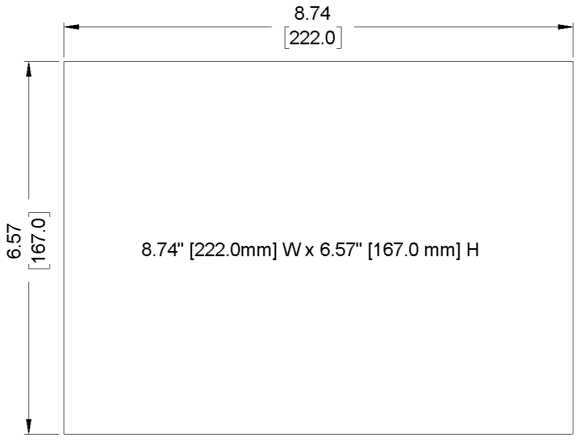

Cutout Dimensions

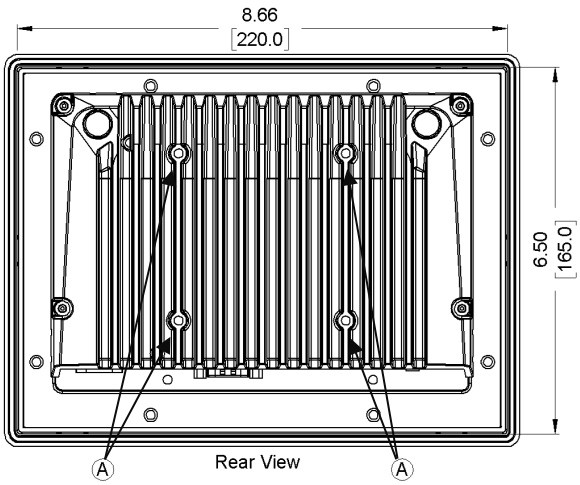

Rear View

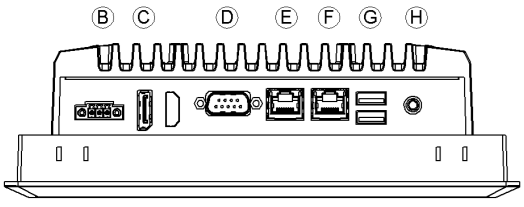

Bottom View

A	VESA 75 mm Screw Holes
B	Power Connector
C	DisplayPort
D	DE9P COM Port (Configurable)
E	2.5 Gigabit Ethernet Port
F	Gigabit Ethernet Port
G	USB 3.2 Host Ports
H	3.5mm Line-Out

OMI6810

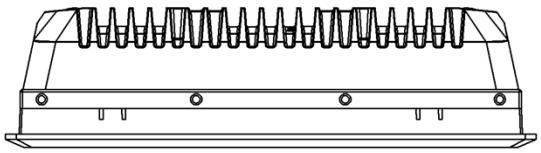

Top View

DIMENSIONS ARE IN INCHES [MM]

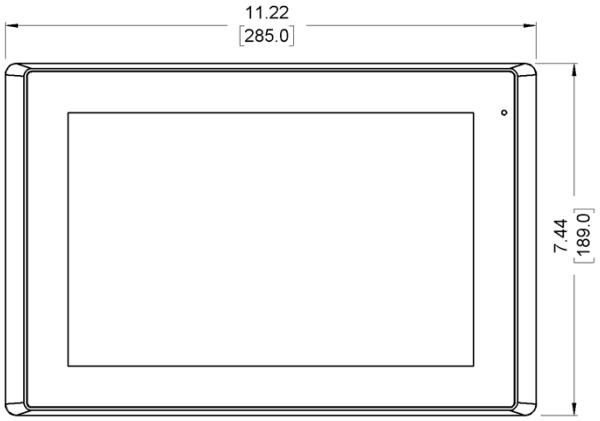

Front View

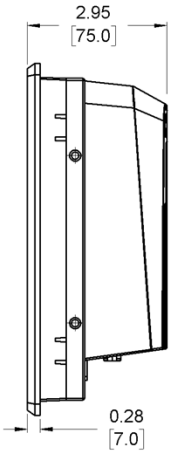

Side View

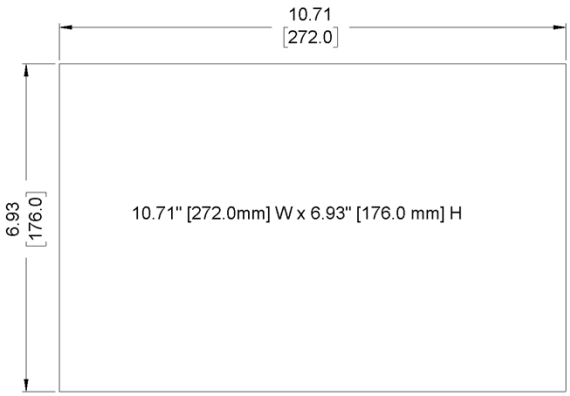

Cutout Dimensions

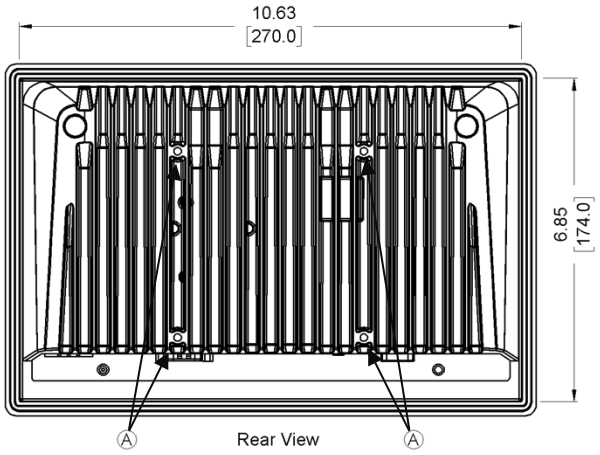

Rear View

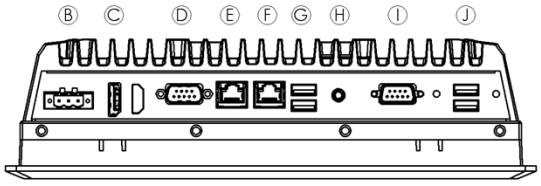

Bottom View

A	VESA 100 mm Screw Holes
B	Power Connector
C	DisplayPort
D	DE9P COM Port (Configurable)
E	2.5 Gigabit Ethernet Port
F	Gigabit Ethernet Port
G	USB 3.2 Host Ports
H	3.5mm Line-Out
I	DE9P COM Port (RS-232)
J	USB 2.0 Host Ports

OMI6812

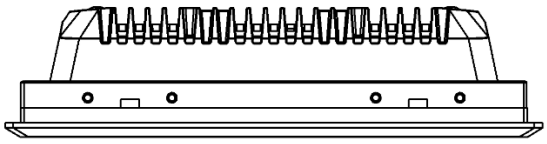

Top View

DIMENSIONS ARE IN INCHES [MM]

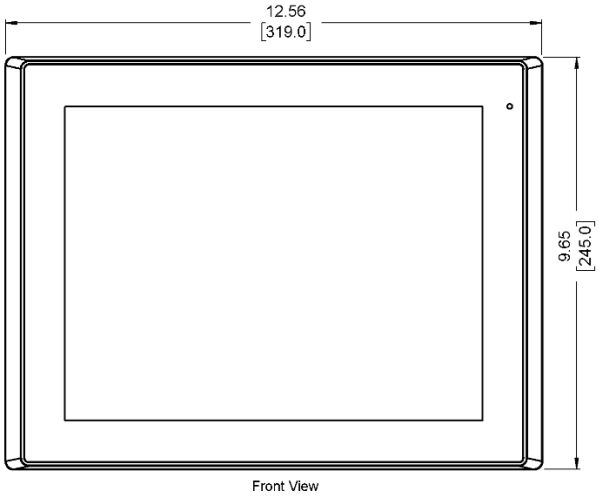

Front View

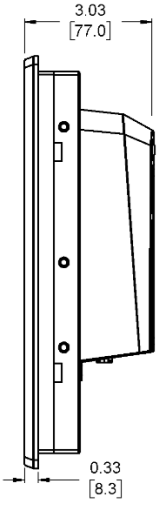

Side View

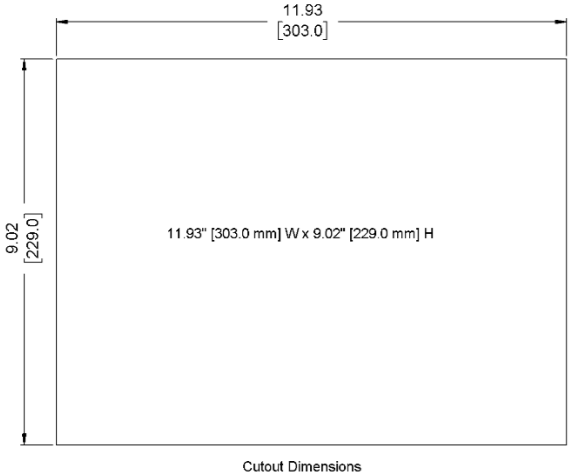

Cutout Dimensions

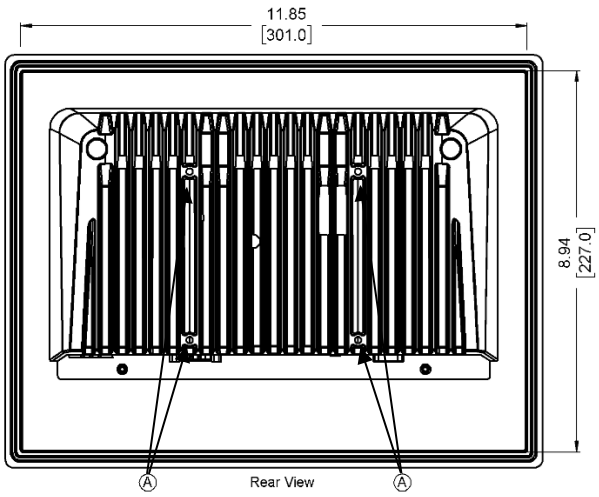

Rear View

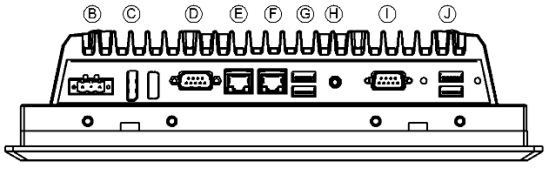

Bottom View

A	VESA 100 mm Screw Holes
B	Power Connector
C	DisplayPort
D	DE9P COM Port (Configurable)
E	2.5 Gigabit Ethernet Port
F	Gigabit Ethernet Port
G	USB 3.2 Host Ports
H	3.5mm Line-Out
I	DE9P COM Port (RS-232)
J	USB 2.0 Host Ports

OMI6815

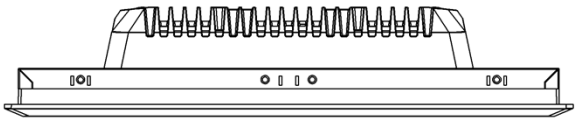

Top View

DIMENSIONS ARE IN INCHES [MM]

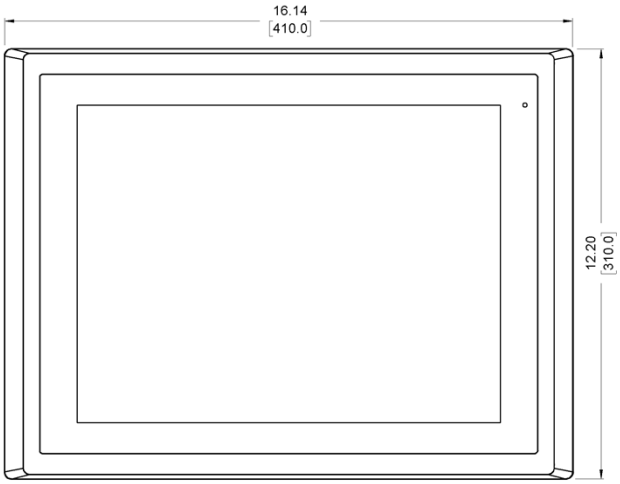

Front View

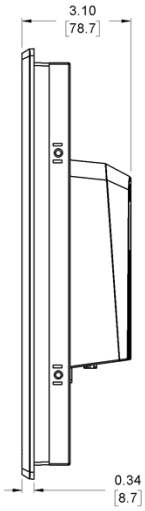

Side View

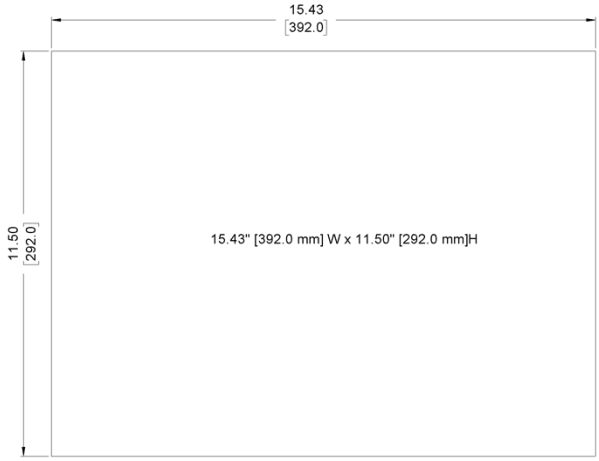

Cutout Dimensions

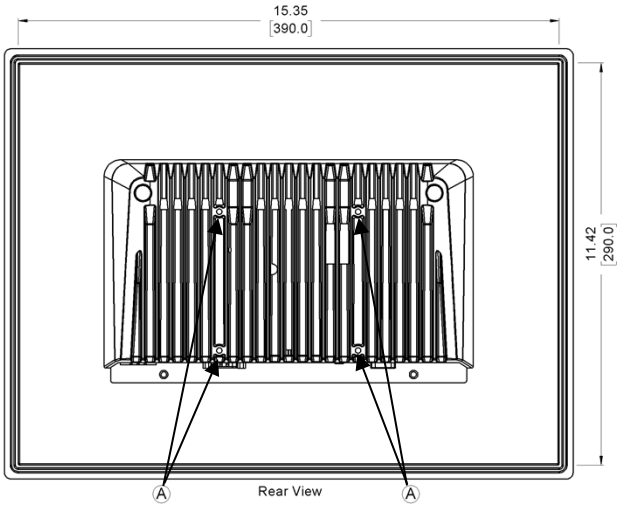

Rear View

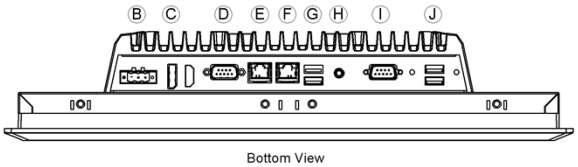

Bottom View

A	VESA 100 mm Screw Holes
B	Power Connector
C	DisplayPort
D	DE9P COM Port (Configurable)
E	2.5 Gigabit Ethernet Port
F	Gigabit Ethernet Port
G	USB 3.2 Host Ports
H	3.5mm Line-Out
I	DE9P COM Port (RS-232)
J	USB 2.0 Host Ports

OMI6816

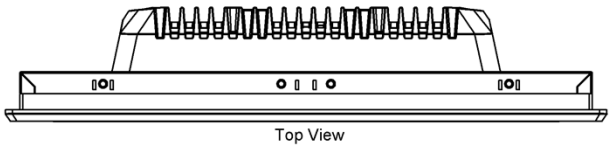

Top View

DIMENSIONS ARE IN INCHES [MM]

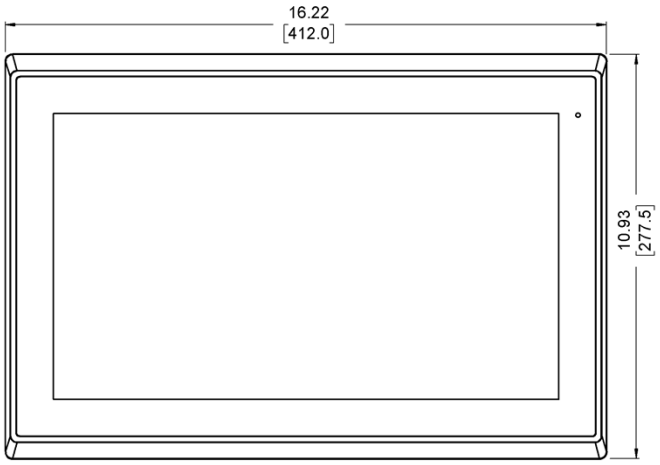

Front View

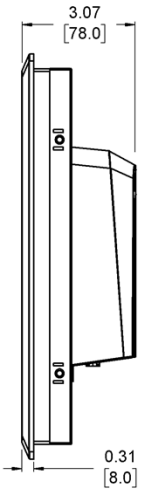

Side View

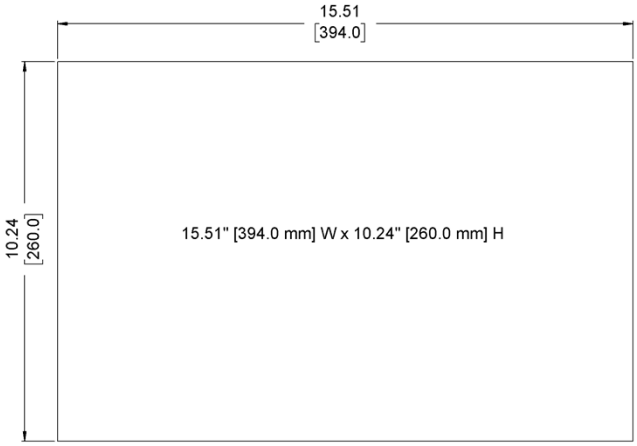

Cutout Dimensions

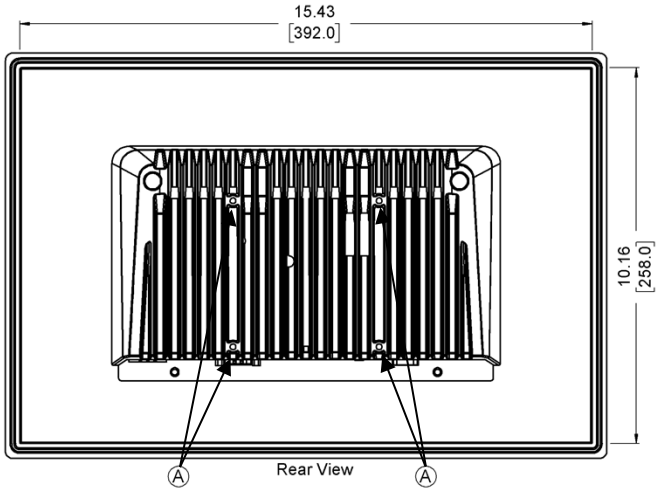

Rear View

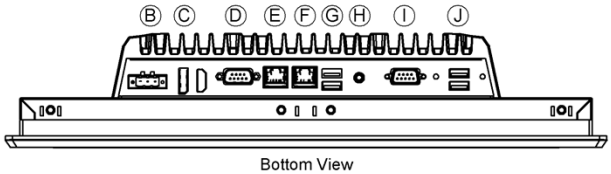

Bottom View

A	VESA 100 mm Screw Holes
B	Power Connector
C	DisplayPort
D	DE9P COM Port (Configurable)
E	2.5 Gigabit Ethernet Port
F	Gigabit Ethernet Port
G	USB 3.2 Host Ports
H	3.5mm Line-Out
I	DE9P COM Port (RS-232)
J	USB 2.0 Host Ports

OMI6817

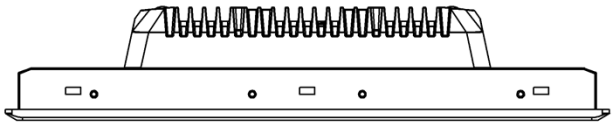

Top View

DIMENSIONS ARE IN INCHES [MM]

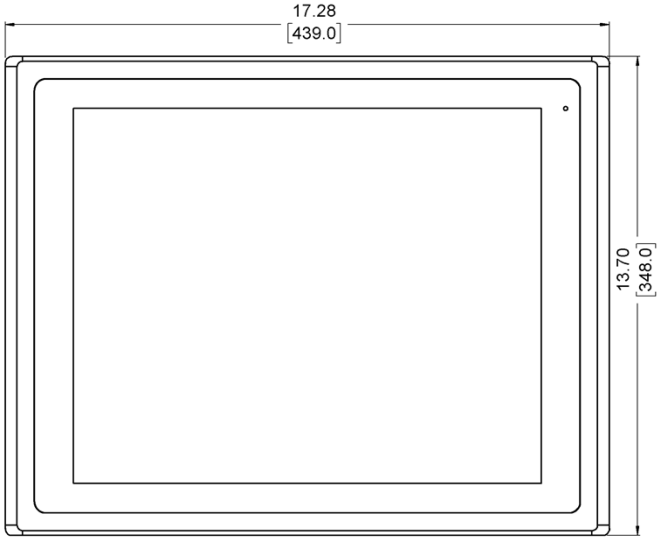

Front View

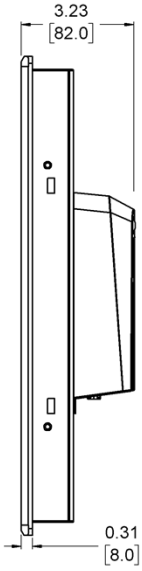

Side View

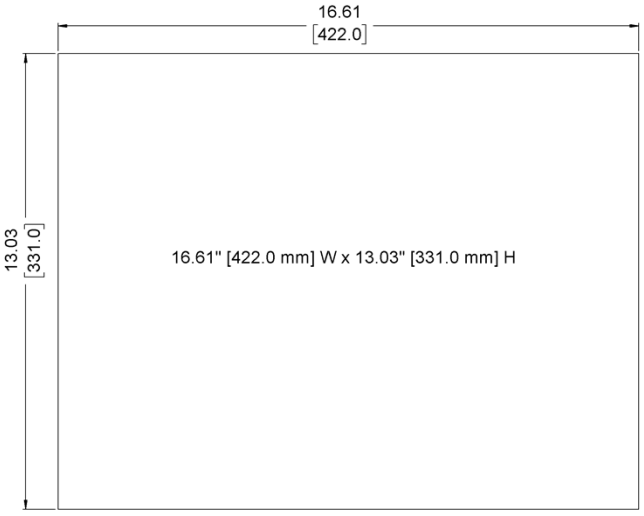

Cutout Dimensions

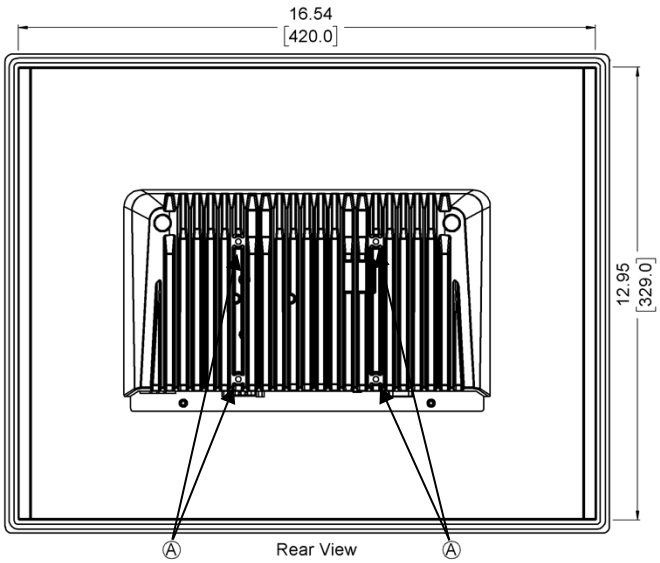

Rear View

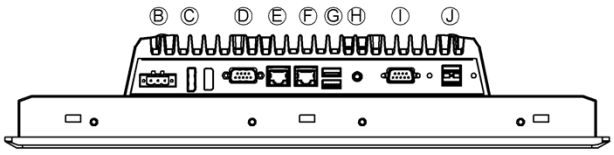

Bottom View

A	VESA 100 mm Screw Holes
B	Power Connector
C	DisplayPort
D	DE9P COM Port (Configurable)
E	2.5 Gigabit Ethernet Port
F	Gigabit Ethernet Port
G	USB 3.2 Host Ports
H	3.5mm Line-Out
I	DE9P COM Port (RS-232)
J	USB 2.0 Host Ports

OMI6818

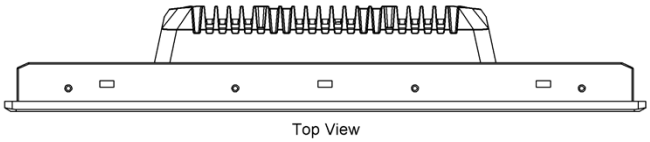

Top View

DIMENSIONS ARE IN INCHES [MM]

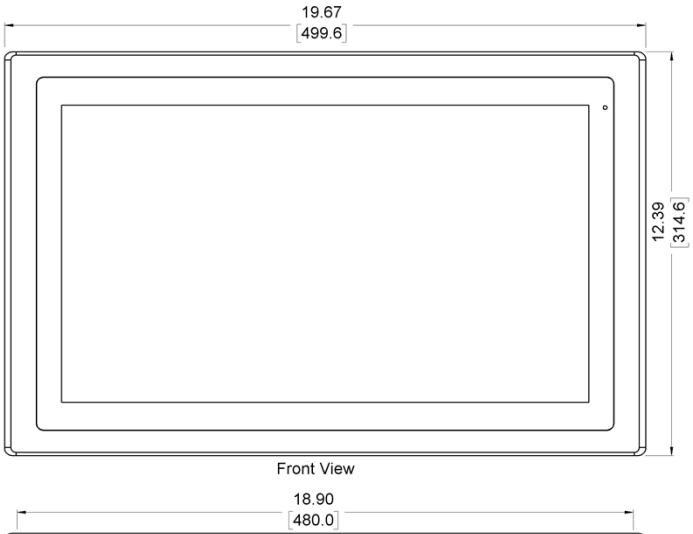

Front View

Side View

Cutout Dimensions

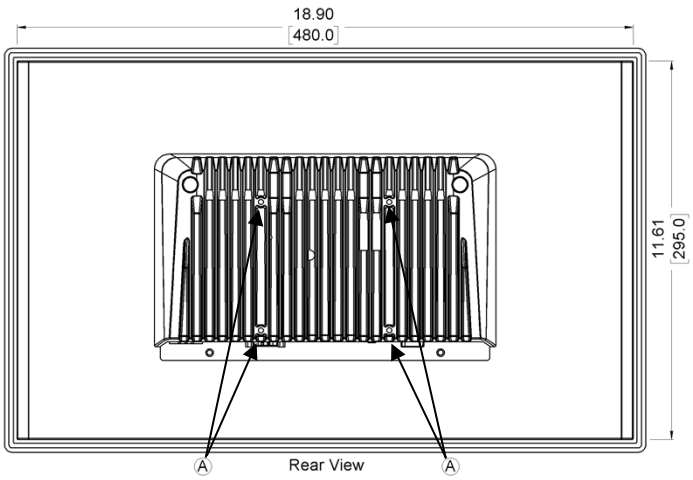

Rear View

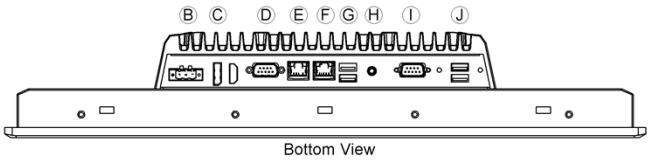

Bottom View

A	VESA 100 mm Screw Holes
B	Power Connector
C	DisplayPort
D	DE9P COM Port (Configurable)
E	2.5 Gigabit Ethernet Port
F	Gigabit Ethernet Port
G	USB 3.2 Host Ports
H	3.5mm Line-Out
I	DE9P COM Port (RS-232)
J	USB 2.0 Host Ports

OMI6819

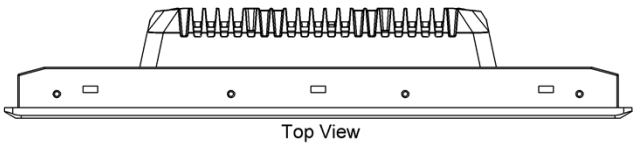

DIMENSIONS ARE IN INCHES [MM]

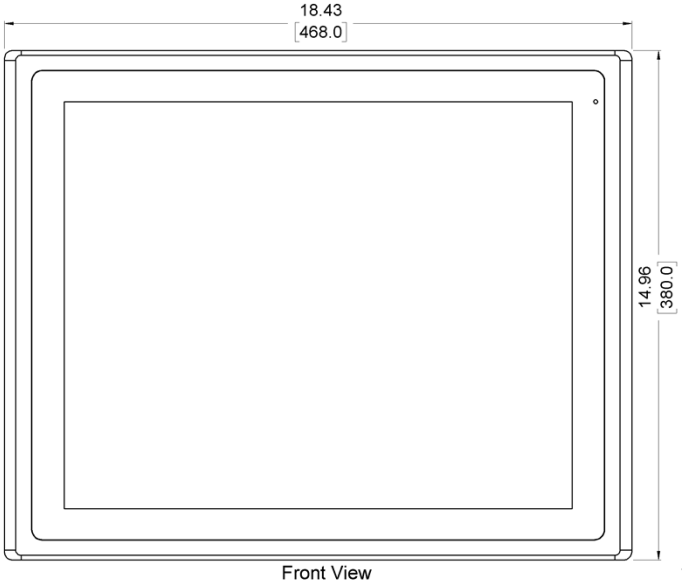

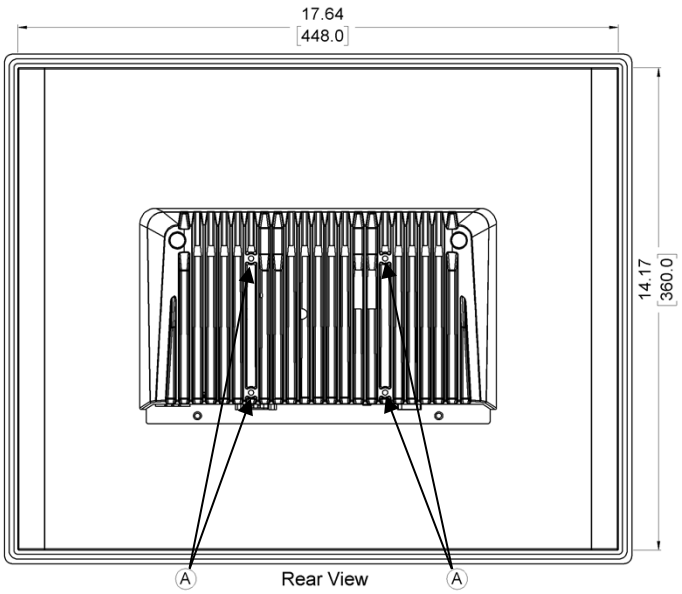

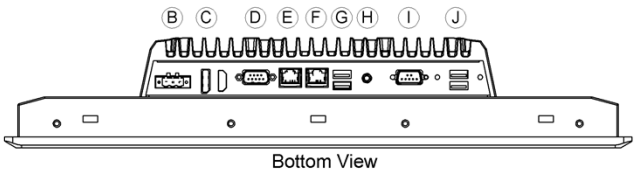

A	VESA 100 mm Screw Holes
B	Power Connector
C	DisplayPort
D	DE9P COM Port (Configurable)
E	2.5 Gigabit Ethernet Port
F	Gigabit Ethernet Port
G	USB 3.2 Host Ports
H	3.5mm Line-Out
I	DE9P COM Port (RS-232)
J	USB 2.0 Host Ports

OMI6821

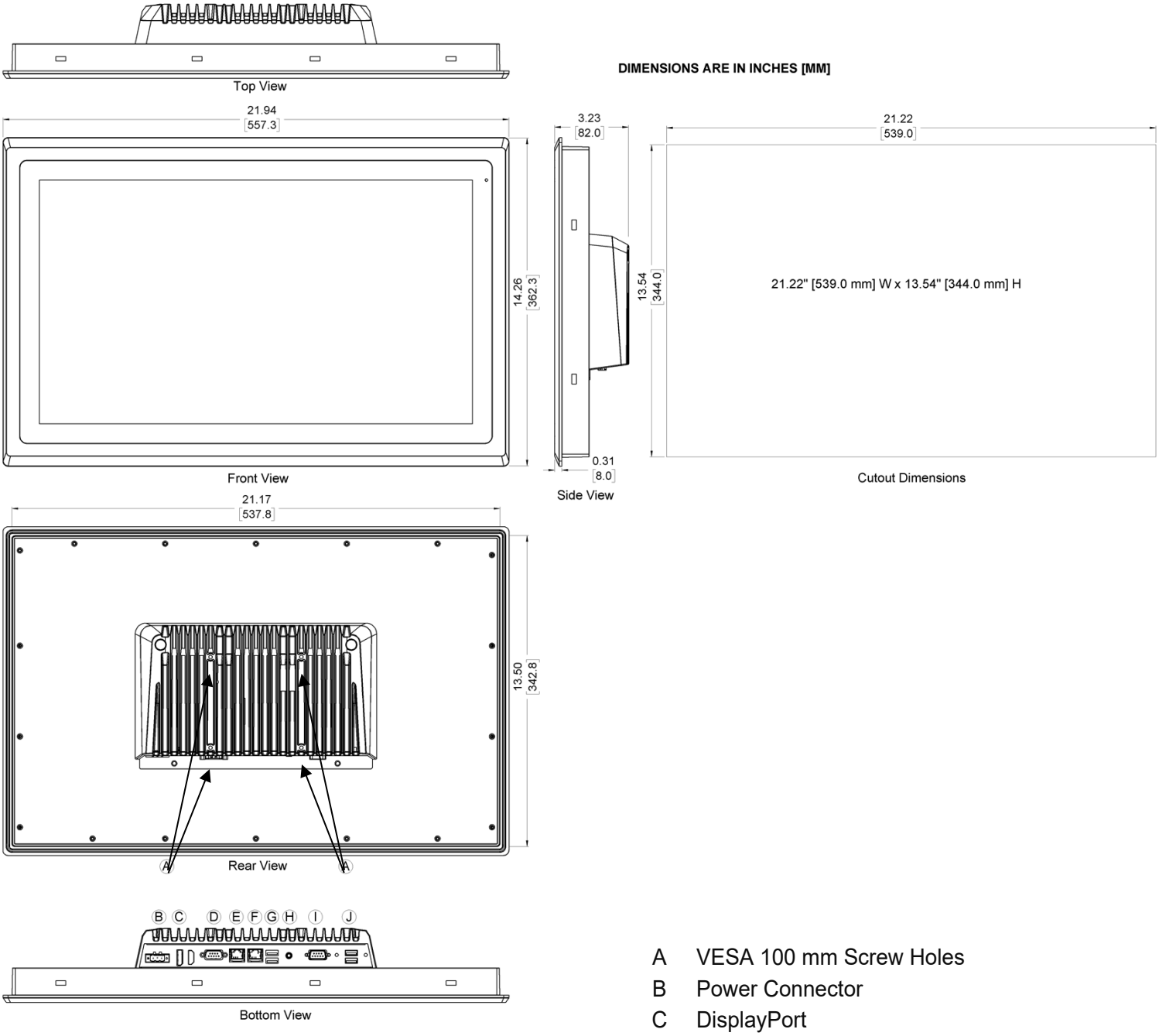

A	VESA 100 mm Screw Holes
B	Power Connector
C	DisplayPort
D	DE9P COM Port (Configurable)
E	2.5 Gigabit Ethernet Port
F	Gigabit Ethernet Port
G	USB 3.2 Host Ports
H	3.5mm Line-Out
I	DE9P COM Port (RS-232)
J	USB 2.0 Host Ports

OMI6824

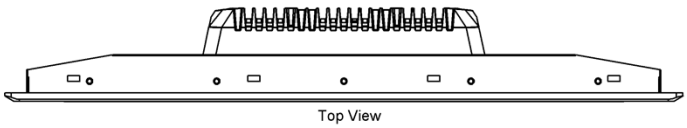

Top View

DIMENSIONS ARE IN INCHES [MM]

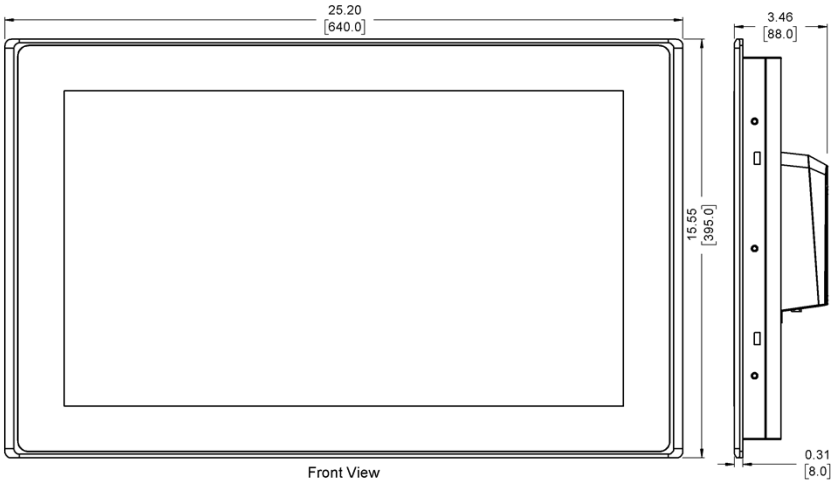

Front View

Side View

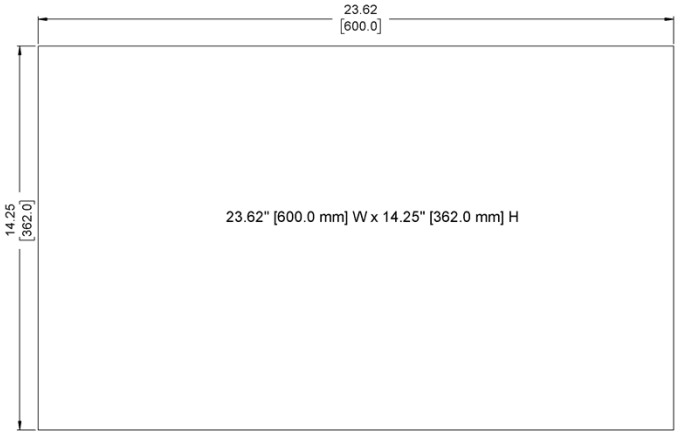

Cutout Dimensions

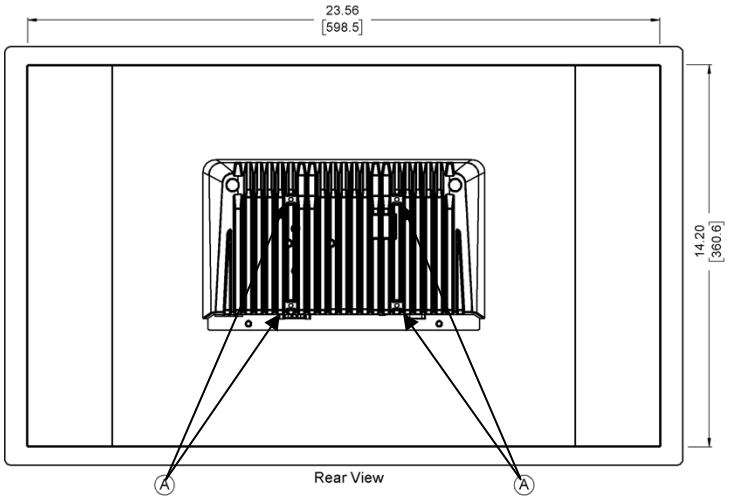

Rear View

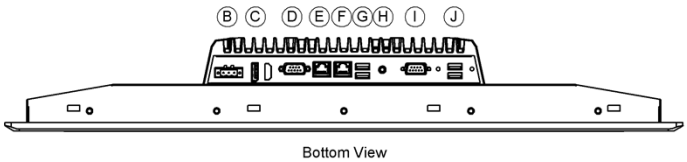

Bottom View

A	VESA 100 mm Screw Holes
B	Power Connector
C	DisplayPort
D	DE9P COM Port (Configurable)
E	2.5 Gigabit Ethernet Port
F	Gigabit Ethernet Port
G	USB 3.2 Host Ports
H	3.5mm Line-Out
I	DE9P COM Port (RS-232)
J	USB 2.0 Host Ports

Engineers and Integrators Trust Maple Systems

Control your factory, monitor your data, and connect your world with Maple Systems Industrial Panel Mount, Rack Mount, Media Player, and Box PCs! All of our Industrial PCs are ideal for applications in Industrial Automation, Manufacturing, Data Centers, Factory Automation, Food & Beverage Processing, Pharmaceuticals, Water and Wastewater Treatment, and Packaging and Material Handling operations. Wide selection, fast delivery, strong warranty—we're your complete IPC partner.

Serving Industries Around the World

Why an environment-first approach works

All our Industrial PCs are ideal for applications in industrial automation, healthcare, manufacturing, oil & gas, packaging, building automation, water, energy, agriculture, food & beverage, and more. Our offerings include high brightness/sunlight readable displays, extended temperature IPCs, stainless steel enclosures, and Class I, Div 2 certified IPCs. Learn more about the industries we serve and discover why more and more companies are choosing Maple Systems.





Why Choose an Industrial PC

Heavy duty computing in industrial settings

The difference between an industrial PC and consumer PC can be hard to spot. Industrial PCs are built for the toughest environments where debris, moisture, temperatures, and vibrations are extremely volatile. Our PCs are engineered for efficiency and can withstand environments that would quickly wear down standard hardware. Consumer PCs are more basic machines and lack the durability to survive these conditions.

Customize To Meet Your Needs

Maximize efficiency

Companies have chosen Maple Systems solutions over Allen-Bradley, Omron, Siemens, Panasonic, and so many others, in hundreds of applications, in every industry, and in every type of organization. Our Industrial PCs are designed to resolve your toughest automation challenges in manufacturing, processing, and fabrication environments, and because we offer thousands of different configurations, designing an IPC to meet your unique requirements is easy.

Supports Your 3rd Party Software

Replace expensive proprietary hardware

Since our Industrial PCs can be configured with either a Windows™ or Linux™ Operating System, adding your own software is easy. Don't be tied to expensive industrial computers or HMIs just because of a name. Our IPCs support FactoryTalk®, Ignition SCADA®, Emerson Ovation®, Simatic SCADA®, Predator Touch HMI®, and hundreds of other HMI and SCADA software solutions.

Maple Systems

Maple Systems, Inc. | 808 134th St SW, suite 120, Everett, WA 98204 | 425.745.3229 | maplesystems.com

Digital Signage Media Players

Video Walls | Multi-Screen | Open Platform

Bring your digital experience to life with cULus-listed, fanless signage PCs built for reliable 24/7 operation. From single-screen signage and multi-screen installations to video walls with up to four 4K displays, touch-ready kiosks, and AI-enabled edge applications, Maple Systems media players deliver the performance and flexibility to scale, on Windows or Linux, with the freedom to use your preferred CMS or digital signage platform. We've partnered with Nimbus808 as our preferred digital signage software.





Rack Mount Industrial PCs

Save Space | Scalability | Reliable

Maple Systems Rack Mount PCs are engineered to bring high-density performance and rugged reliability directly to your server racks. Built for 24/7 continuous deployment in mission-critical environments, these purpose-built industrial PCs deliver the computing power, thermal efficient, and hardware stability your digital infrastructure demands. These high-performance PCs utilize standardized, heavy-duty chassis footprints to maximize vertical rack space while facilitating seamless integration with existing server cabinets.

Class 1 Division 2 Industrial PCs

Rugged | Stainless Steel | Certified

Our Class 1 Div 2 Industrial PCs for hazardous locations are ATEx, IECEx certified. These industrial computers offer an intrinsically safe design which is ignition and explosion proof, perfect for applications in oil, gas, petrochemical, and mining. With a high performance optically bonded, capacitive touchscreen that feature 1000nits*, they are perfect for your light intensive environments.





Standardizing SCADA Communications with Maple Systems Components

From simple stand-alone machines to sophisticated multi-device networked production lines, Maple Systems solutions empower your facility with enterprise-level operations and IIoT functionalities. Leveraging advanced cloud connectivity, Maple Systems hardware and software assist with:

- Logging data from your devices using Maple Systems, smart HMIs and gateways to aid in reporting, improve efficiency, and reduce downtime.
- Planning routine maintenance with ease by tracking system health metrics directly on Maple Systems HMIs and rugged Tablets.
- Adding advanced IIoT functionality via built-in support for MQTT, OPC UA, native Ignition server integration, and secure SQL databases like MySQL or Microsoft SQL Server.

The right Maple Systems products can help you standardize communications between legacy and modern devices, gluing disparate systems together to create a single, unified source for your SCADA ecosystem. There is no need to completely redesign your entire application. Keep the components that are already working for you, and simply add Maple Systems components to grow your abilities to supervise, control, and acquire data.

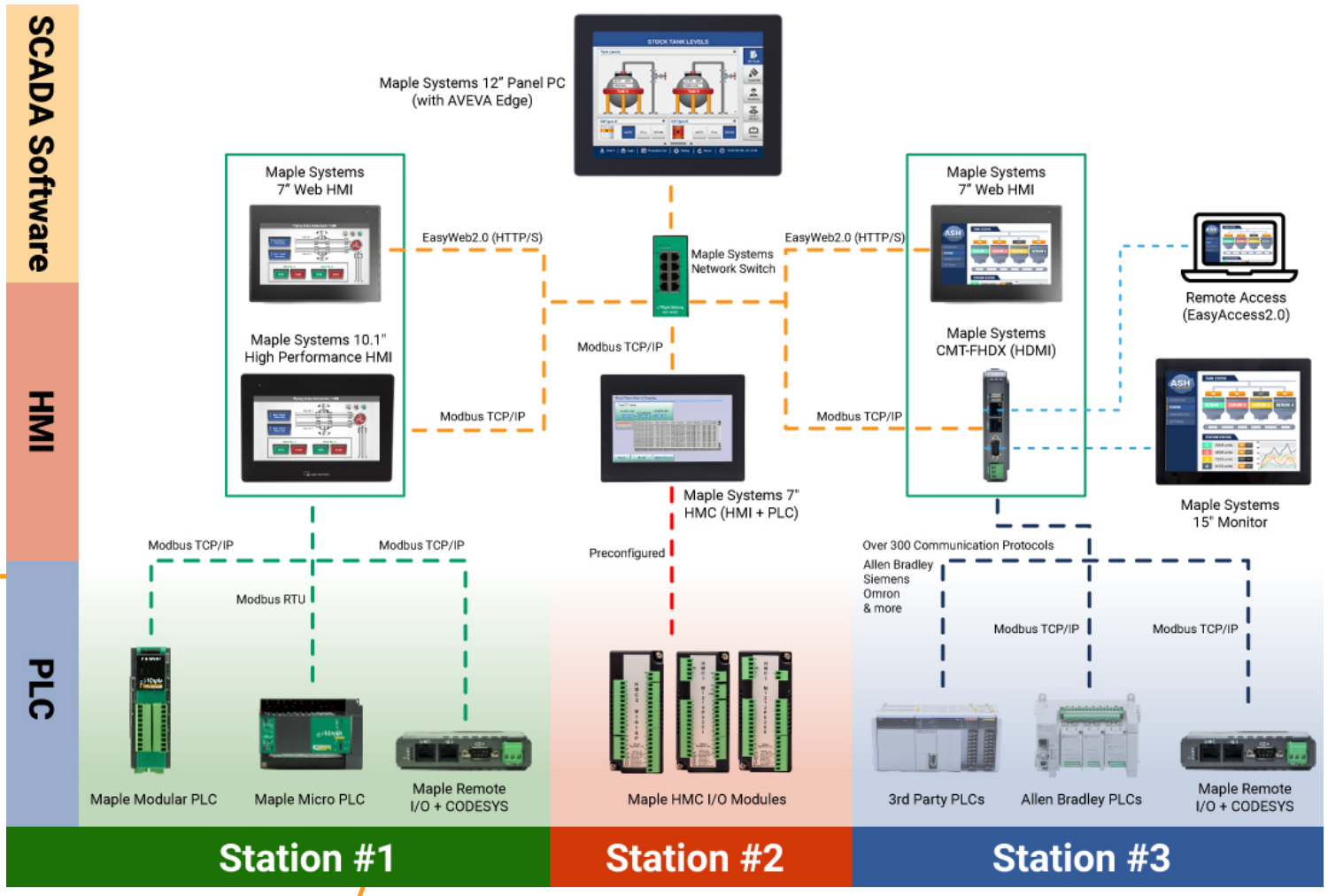

Industrial Automation and Control Solutions

Imagine a system that seamlessly integrates real-time monitoring, intelligent control, and invaluable data analytics that can boost productivity, efficiency, and overall performance. That's the transformative capabilities of Maple Systems products and US-based technical sales and support.



HMIs

IIoT Control for Smart Factories

Our HMIs have enhanced software features such as remote access, data handling, security, recipes, email, and more. IIoT support for MQTT, Sparkplug B, Ignition SQL, and OPC UA. Class 1, Div 2 options available.



PLCs

Modular and Micro Series

Our PLCs provide an affordable combination of function and control in a cost-effective package. Programmed with our FREE control software, MapleLogic, that features high-speed counters, positioning control, input module filtering, PID control, and more, depending on the model.



Industrial PCs

Panel, Box, Rackmount, Media Player

Our Industrial PCs are full-strength, fan-less industrial computers with the power to support your SCADA software. Customize to meet your requirements: CPU, storage, memory, OS, and wifi upgrades available.



HMI + PLCs

Combining HMI and PLC functionality

These HMCs are powerful HMIs with I/O and supports high-speed counters and timers, provides serial, Ethernet communications, and support IEC programming. Class I, Division 2. Remote access options available.



Industrial Monitors

High Brightness, Wide Temp Options

Pair a Capacitive Touchscreen Monitor with one of our Industrial Box PCs or HDMI-enabled HMI to expand your project's capabilities. High brightness (1000nit), Wide-Temp, and Class I Division 2 options available.



Rugged Tablets

Durability, Performance, and Mobility

Built for industrial environments and certified to MIL-STD-810H military standards, these tablets feature waterproof enclosures with Gorilla Glass displays that protect against dust, water, and extreme temperatures.



Network Switches

Industrial Grade Components

Our network switches provide a high level of immunity against EMI and EMS found in industrial environments; and include features such as ESD Protection, Surge Protection, and Short Circuit Protection to ensure continuous operation in unstable power conditions. Unmanaged and managed switches available.



HTML5 Web HMI

Versatile and secure access to any web page

Web HMIs come standard with a built-in Chromium Browser, HTML5 Powered, IP66, Class I, Div 2 rating, ensuring intuitive interaction that enables users to access the same web content across many platforms.



Tower Stack Lights

Flash patterns and buzzer functions

Tower stack lights / Signal Towers provide high-visibility visual and audible signaling for clear machine status indication, safety alerts, and efficient industrial communication.



Pushbuttons

Dependable control for electrical and automation systems

Choose momentary or maintained action with options for illuminated, selector, emergency stop, and toggle designs.



Power Supplies

DIN Rail Mountable

Maple Systems DIN rail power supplies convert AC line voltage into clean, regulated DC for the PLCs, HMIs, I/O, sensors, relays and valves in your control panel.



PID Controllers

Precise, reliable process control

The right PID controller helps maintain your target setpoint, minimize process variation, and keep your operation running smoothly. Our PID Controllers combine auto-tuning, fuzzy logic PID control for industrial process and temperature applications.

Knowledge Base

Guides, tutorials, and documentation

Technical guides and how-to articles for Maple Systems products. Resources and configuration guides including programming basics, setup, communication protocols, software deployment, networking, and so much more!

Schedule a call with one of our product specialists today